Edison
robotics for everyone

EdBuild

Let's build the EdTank

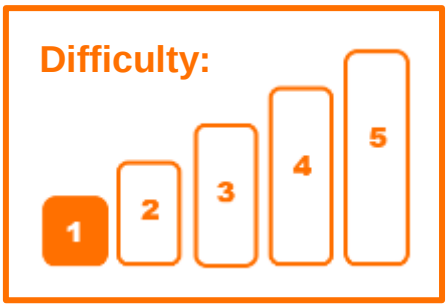

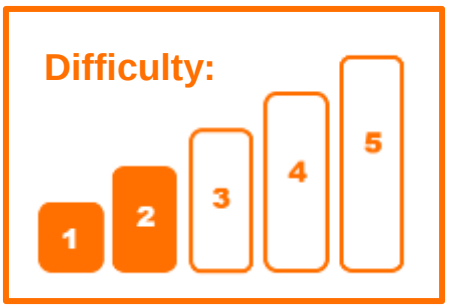

The EdTank EdBuild by Microbric Education is licensed under a Creative Commons Attribution-ShareAlike 4.0 International License.

EdBuild – the EdTank

The EdTank is actually two builds in one.

First, build the basic EdTank, which can be programmed using the barcodes in this guide and controlled with a standard TV or DVD remote control. You will be able to drive the basic EdTank forwards, backwards and turn it right or left.

Second, try building the complete EdTank with a rubber band cannon. The complete EdTank is an expansion of the basic EdTank. The complete EdTank with cannon can be programmed using the barcodes in this guide and controlled with a standard TV or DVD remote control. You will be able to drive the EdTank forwards, backwards and turn it right or left. You will also be able to control when you fire the rubber band out of the cannon.

Build difficulty rating

The basic EdTank is rated a level 1 build.

The complete EdTank with cannon is rated a level 2 build.

Difficulty rating	Recommended age	Programming skills needed
1	8+	- Barcodes and remote control
2	8+	- Barcodes and remote control
3	8+	- Barcodes and remote control
4	10+	- Barcodes and remote control ***AND*** - EdScratch ***OR*** - EdPy
5	12+	- EdPy

To successfully complete and operate a build, you will need an understanding of the programming skills listed.

Learn more about programming with Edison at:

- **Barcodes:** Appropriate for ages 4+. No prior experience with programming or robotics is assumed or required. www.meetedison.com/robot-activities/youre-a-controller/
- **EdScratch:** Best suited to students aged 10 and up, ideal for students 10 to 13. A basic understanding of programming fundamentals may be helpful. www.meetedison.com/robot-programming-software/edscratch/
- **EdPy:** Best suited to students aged 13 to 16 years old. A basic understanding of programming fundamentals may be helpful. www.meetedison.com/robot-programming-software/edpy/

Get set up

Before you begin this build, check that you have everything you need and that you can do the programming required. It's also a good idea to get familiar with how to build with your Edison robot.

What you need

To make the basic EdTank, you will need:

- 1 Edison robot
- 1 EdCreate – Edison robot creator's kit
- 1 TV or DVD remote
- 1 print-out of the 'bottom Edison' barcodes (from in this guide)

To make the complete EdTank with cannon, you will need:

- 2 Edison robots
- 1 EdCreate – Edison robot creator's kit
- 1 TV or DVD remote
- 1 print-out of the 'Bottom Edison' barcodes sheet (from in this guide)
- 1 print-out of the 'Top Edison' barcodes sheet (from in this guide)

Note: The complete EdTank with cannon is an extension of the basic EdTank – only one pack of EdCreate is required for either build.

Programming required in this build

To program the basic EdTank, you will need to program a remote control with four different commands using the barcodes in this guide.

To program the complete EdTank with cannon you will need to program a remote control with five different commands using the barcodes in this guide.

Building with Edison

You can build with Edison using an EdCreate creator's kit or any other LEGO brick compatible building system.

Bricks can be attached to the top and bottom of your Edison robot. Pegs can be attached on the sides of Edison. When Edison's wheels are removed, cross axles can be used in the powered sockets.

There are three types of holes on the side of Edison: pin holes, stud holes, and cross axle sockets. Look at the following images to learn more about how to connect and build with Edison.

Edison's side and top connections

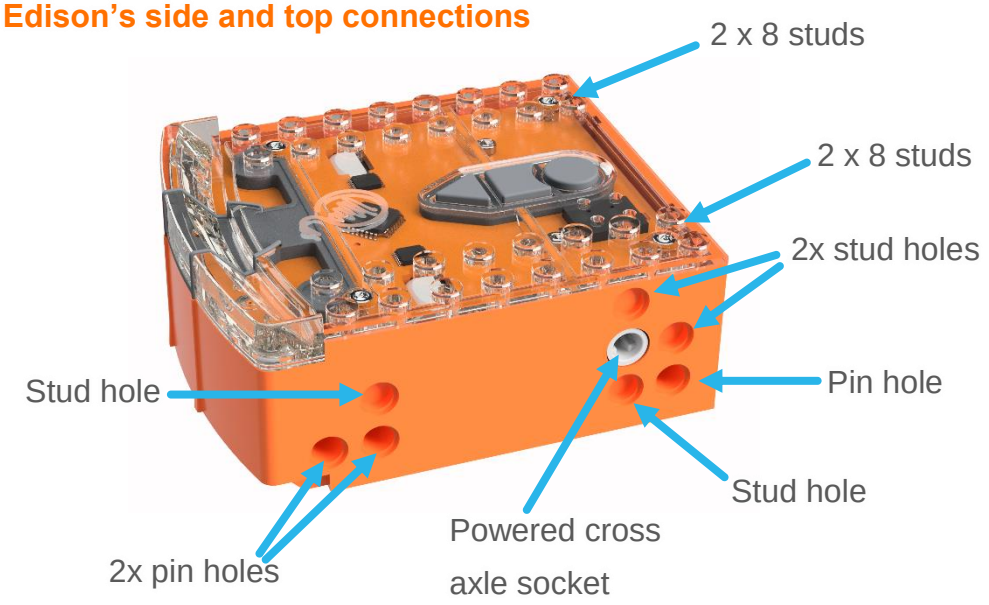

Hole type	Description	Connects to
Pin hole	A full-depth hole for connecting pegs.	
Stud hole	A hole of normal stud-depth which works with half pegs.	
Cross axle socket	A powered socket which rotates.	

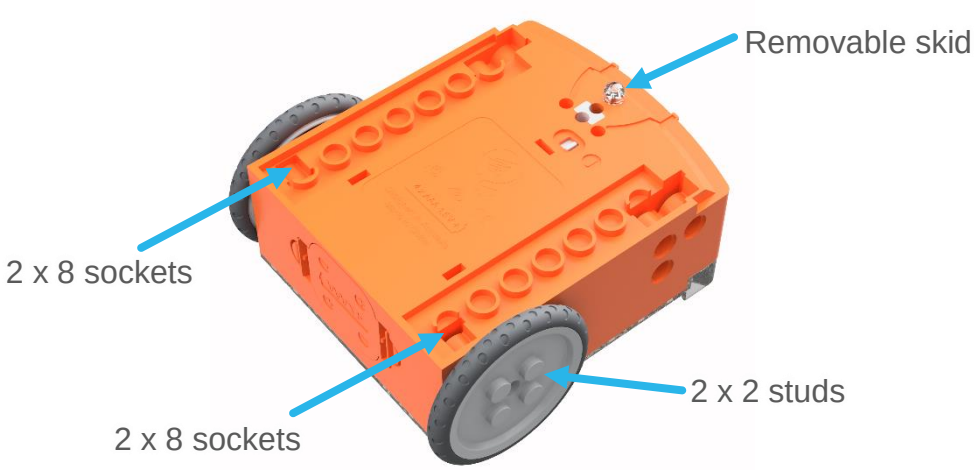

Edison's bottom and wheel connections

Let's build the EdTank!

The EdTank is a remote-controlled tank that you can drive around. The complete EdTank also has a cannon which you can use to fire a rubber band.

This is what the finished basic EdTank looks like:

This is what the finished complete EdTank with cannon looks like:

Step 1: Program Edison

Before you begin building with the EdCreate parts, you will need to program the remote-control codes.

The next two pages have the remote-control barcodes for the bottom and top Edison robots. Print out the pages you need (just the bottom Edison for the basic EdTank or both pages for the complete EdTank) so you can drive your Edison robots over the barcodes.

Print out this page!

Bottom Edison – barcodes

The bottom Edison is the driving Edison.

Program the driving Edison

The driving Edison will control the movement of the EdTank (forwards, backwards, turn left and turn right). Drive this Edison over the following barcodes, programming each to a button that corresponds well with the driving manoeuvre on the remote control. Don't use buttons that you want to use to control the cannon.

Reading the barcode

1. Place Edison facing the barcode on the right side
2. Press the record (round) button 3 times
3. Edison will drive forward and scan the barcode
4. Press a button on your TV/DVD remote that you want to activate that function

Barcode – IR learn drive forward

Barcode – IR learn drive backward

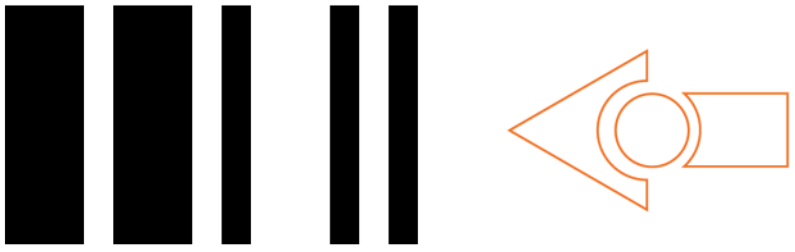

Barcode – IR learn turn left

Barcode – IR learn turn right

Print out this page!

Top Edison – barcodes

The top Edison controls the rubber band cannon.

You may want to mark the Edison robots so you don't confuse which one is programmed to be the bottom robot and which one is programmed to be the top one while you are building. You can mark one of the Edison's as the 'top' robot by using a spare brick or a piece of tape to indicate it is the top Edison. You can also leave the wheels on that Edison right up until you need it so you won't get confused!

Program the cannon Edison

The cannon Edison will control when the rubber band cannon fires. Drive this Edison over the following barcode, programming a button that corresponds well with the cannon fire manoeuvre on the remote control. Don't use buttons that you used to control how the tank drives.

Reading the barcode

1. Place Edison facing the barcode on the right side
2. Press the record (round) button 3 times
3. Edison will drive forward and scan the barcode
4. Press a button on your TV/DVD remote that you want to activate that function

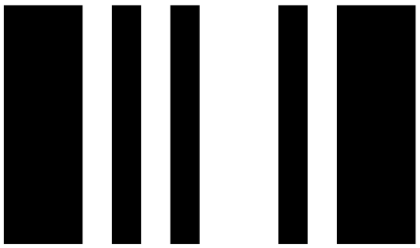

Barcode – IR learn cannon fire

Suggested remote control button setup for the EdTank

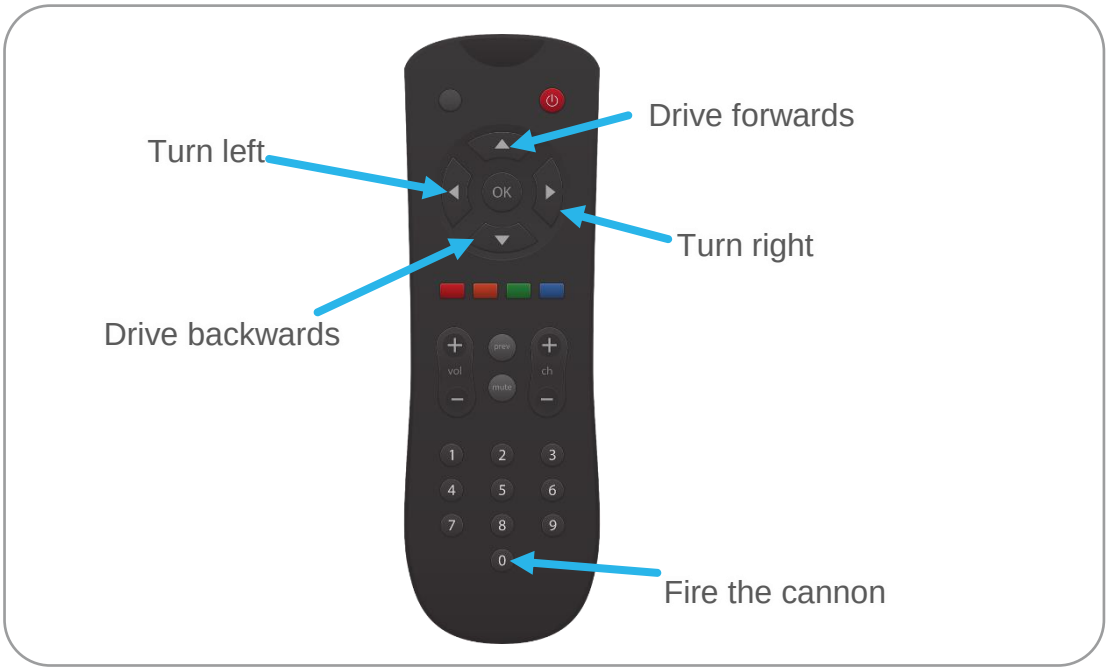

Step 2: Assemble the EdTank

Follow the illustrations step by step to build the EdTank.

The basic EdTank is fully assembled by step 12. If you are building the complete EdTank with cannon, continue to step 13.

Reading the instructions:

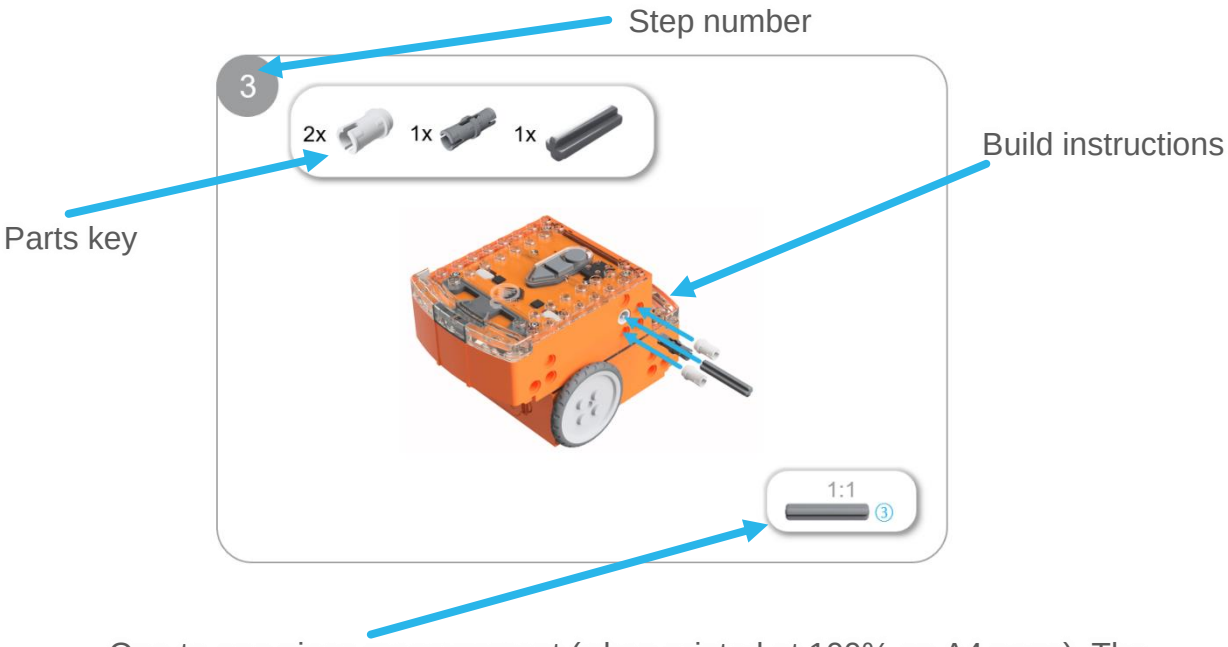

One-to-one piece measurement (when printed at 100% on A4 page). The number in the circle indicates the part's length in number of studs.

1

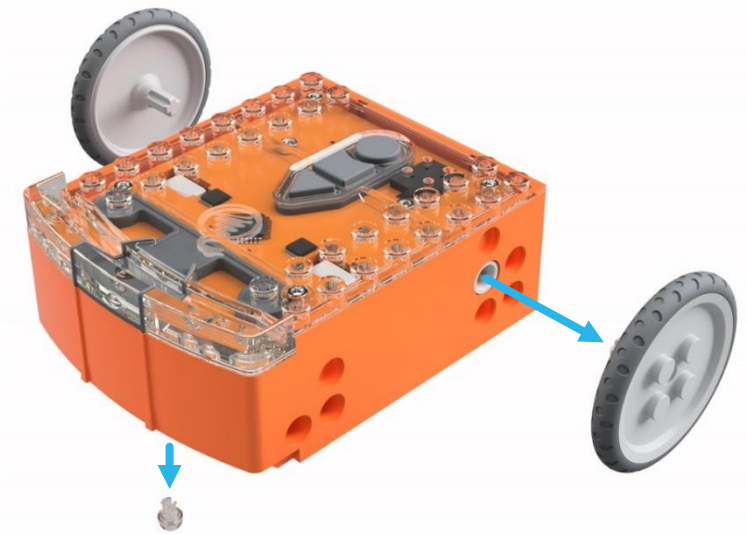

2

3x 3x

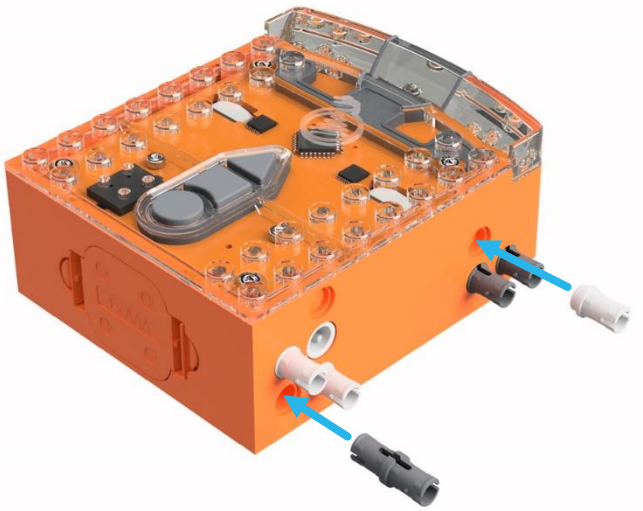

3

1x

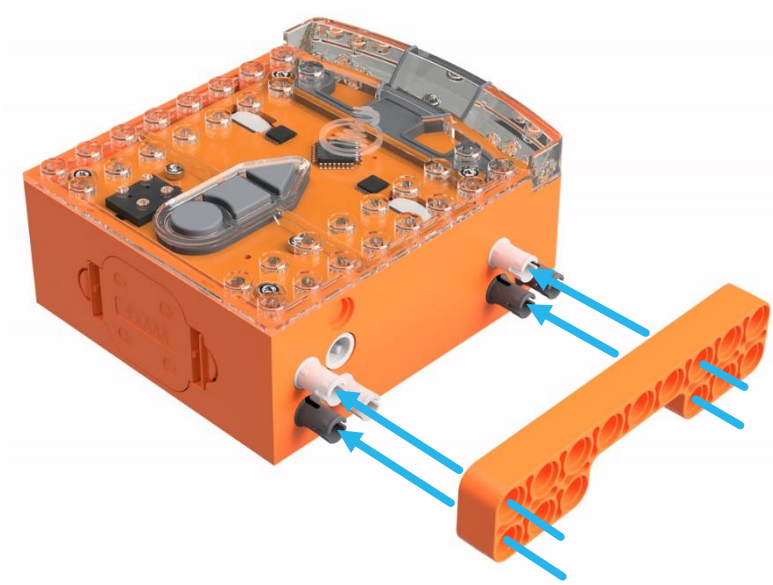

4

3x 3x

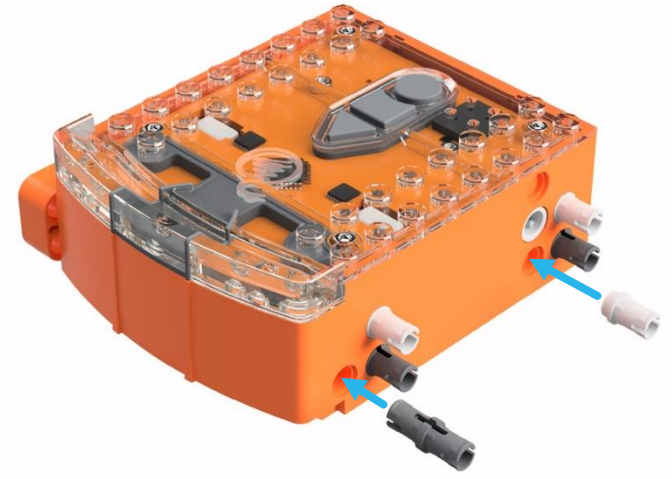

5

1x

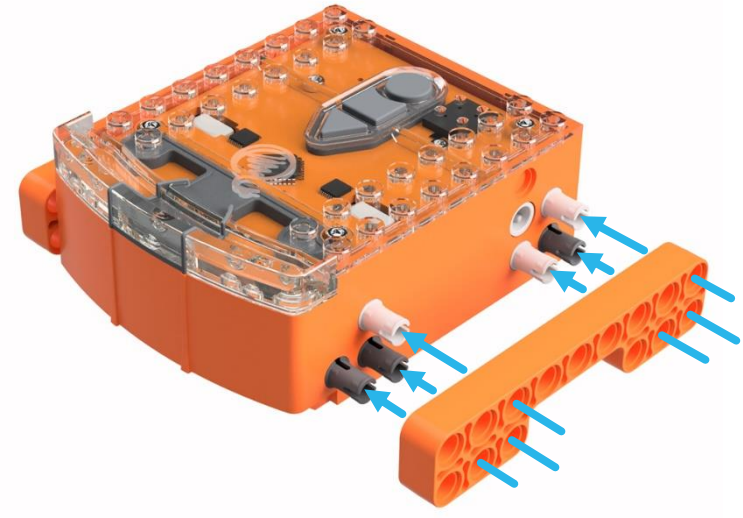

6

2x

1:1

④

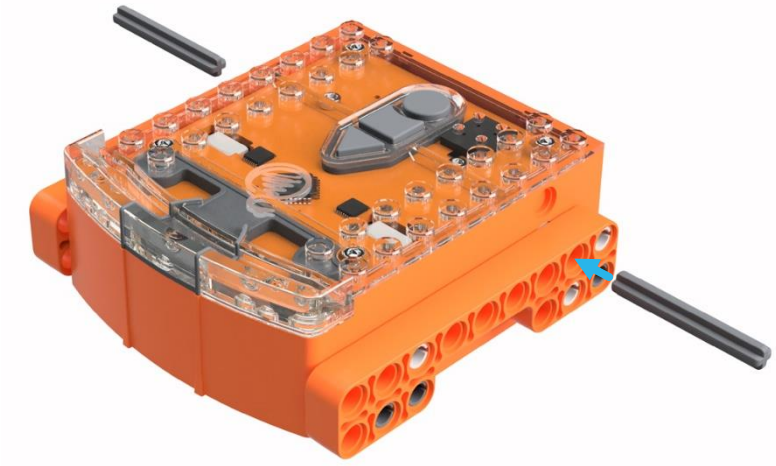

7

4x

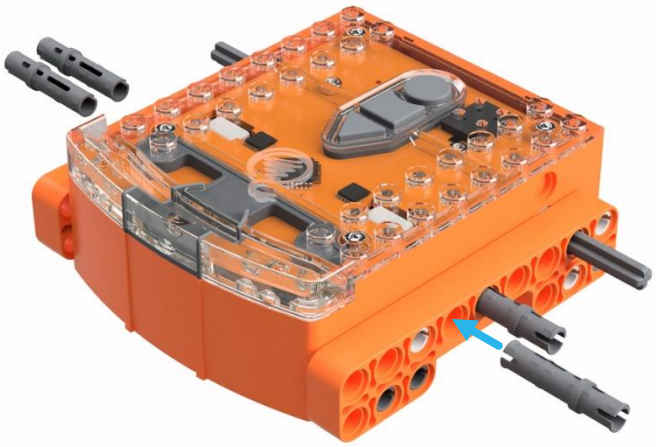

8

2x

1:1 ③

9

4x

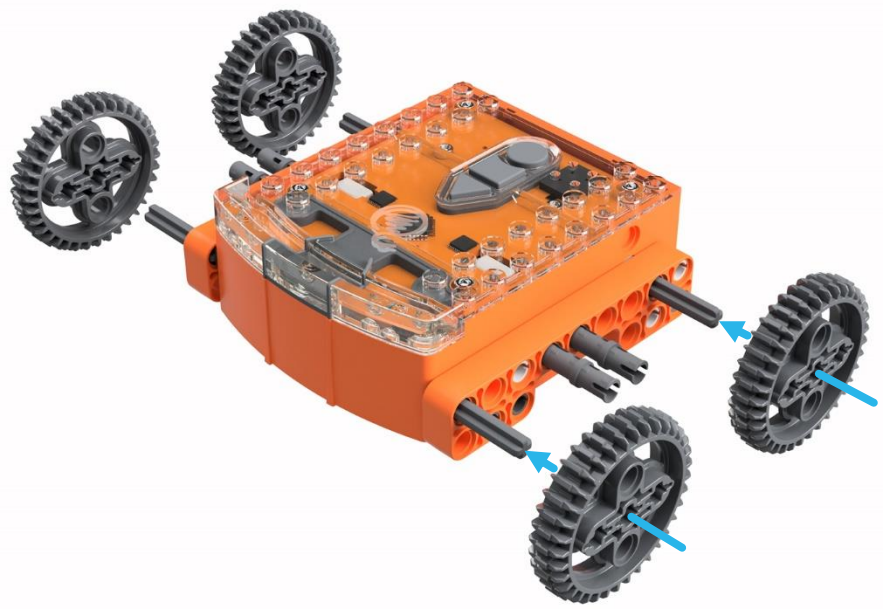

10

2x

1:1

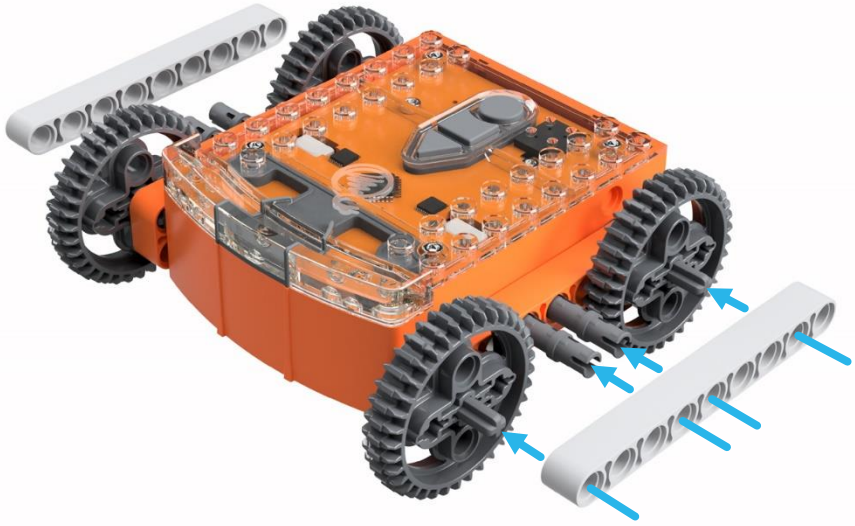

11

2x

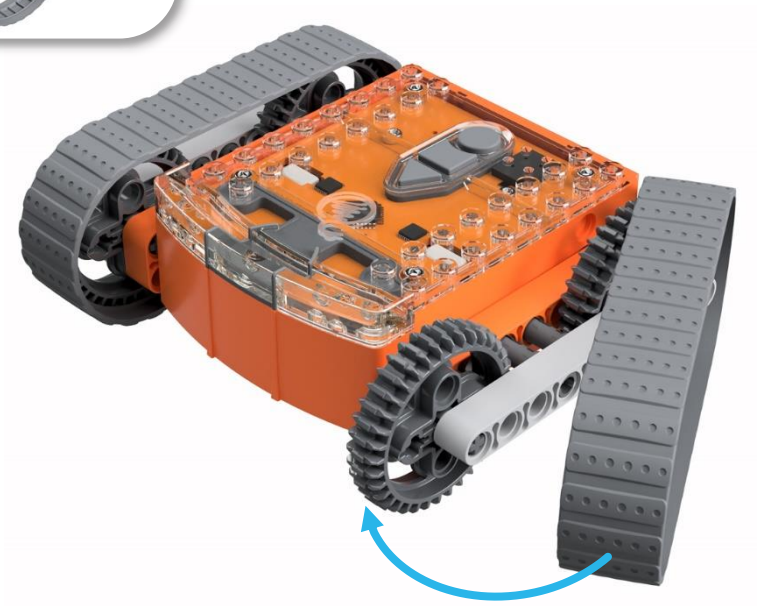

12

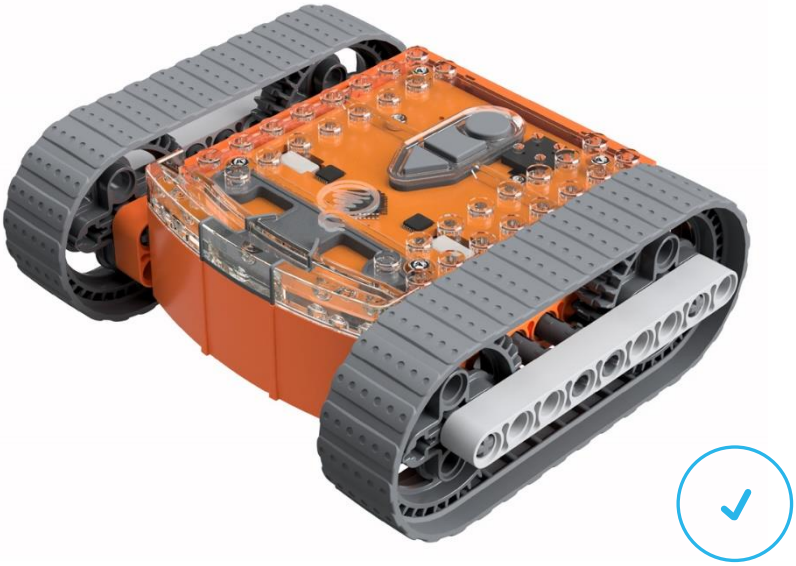

13

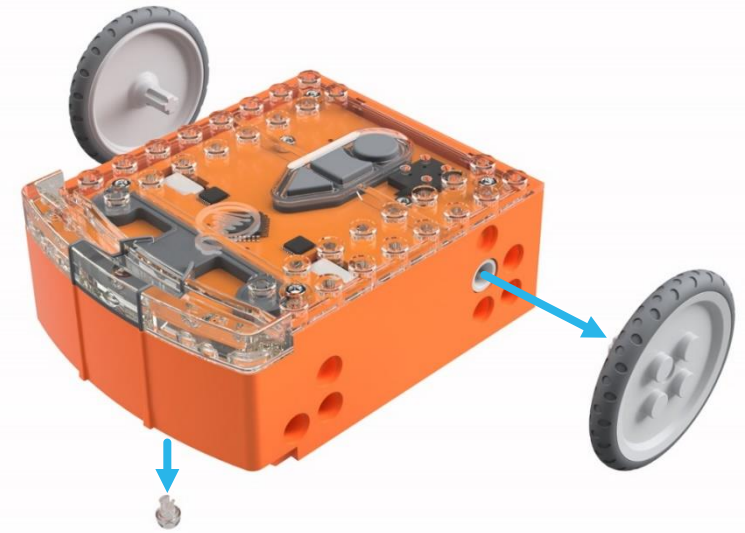

14

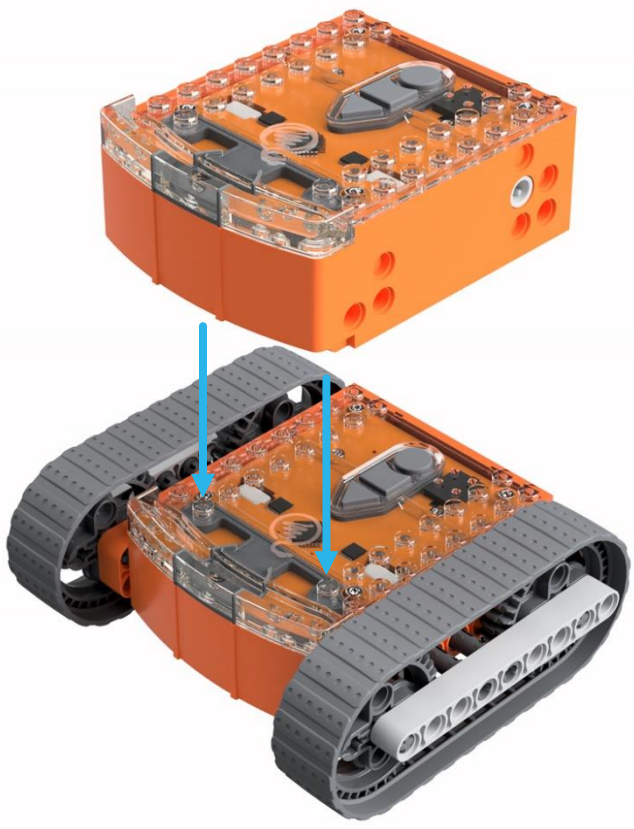

15

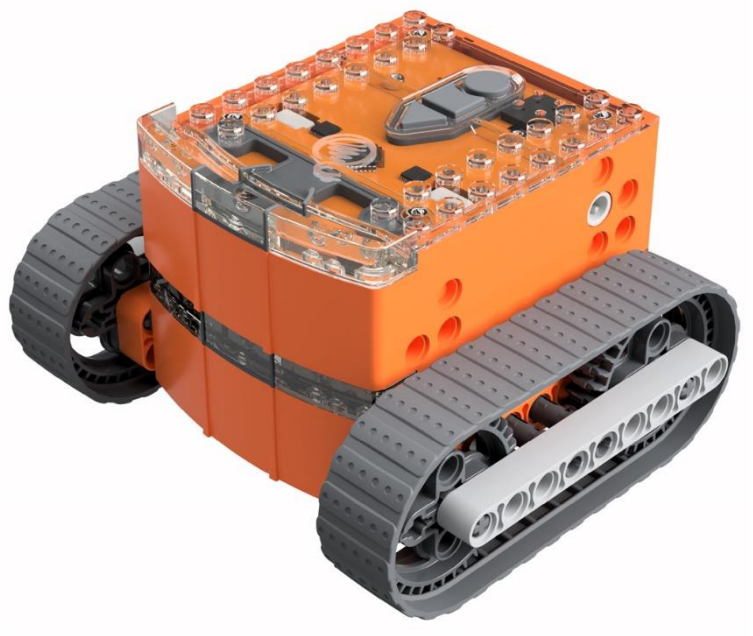

16

1x 3x

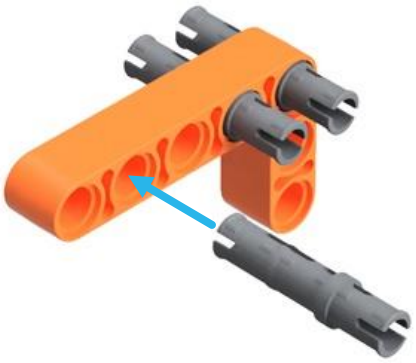

17

2x 2x 1x 1x

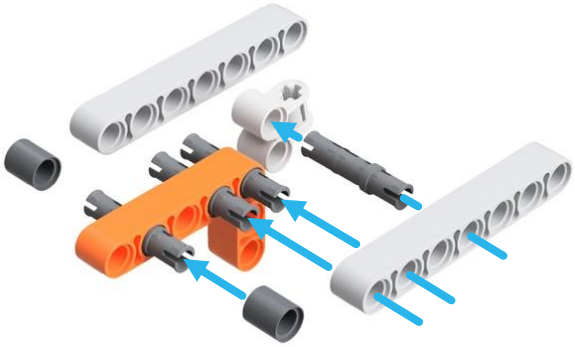

1:1

7

18

1x 1x

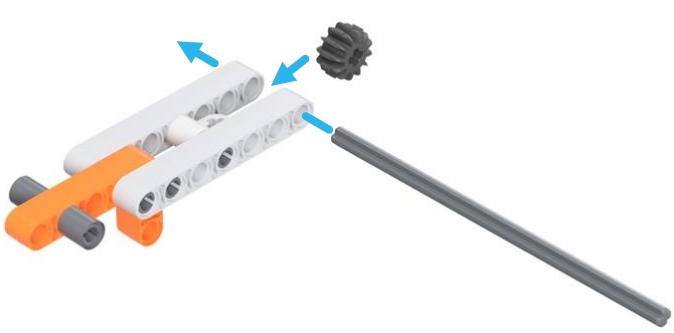

1:1

12

19

2x 2x 2x 2x

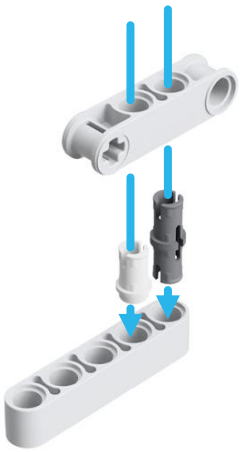

2x

1:1

5

20

2x 1x

1:1

6

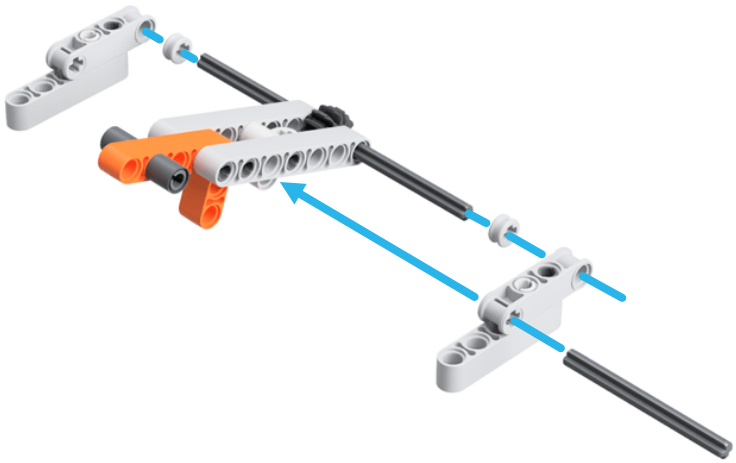

21

22

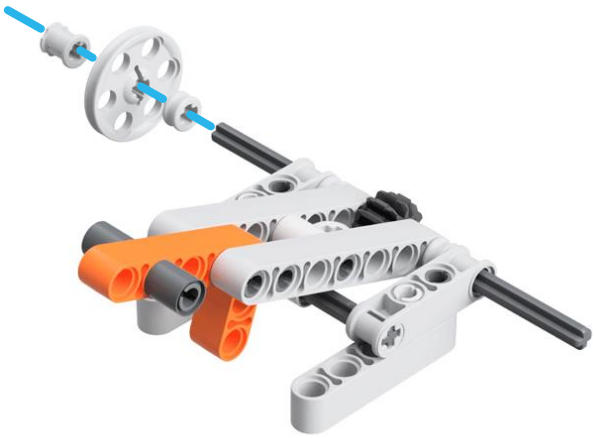

23

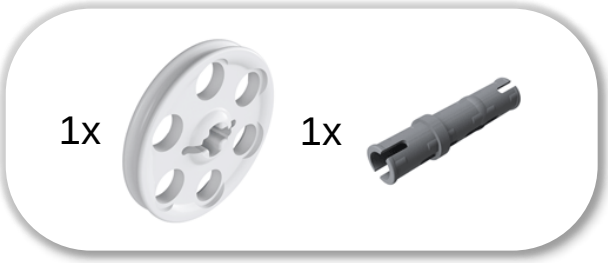

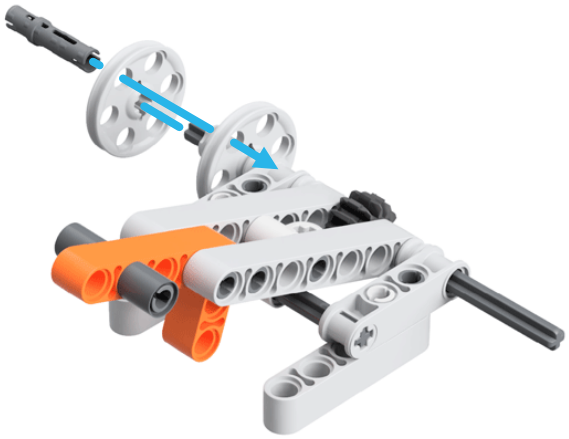

24

25

26

1x 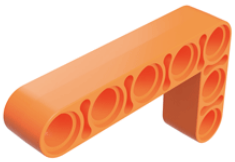
1x
1x

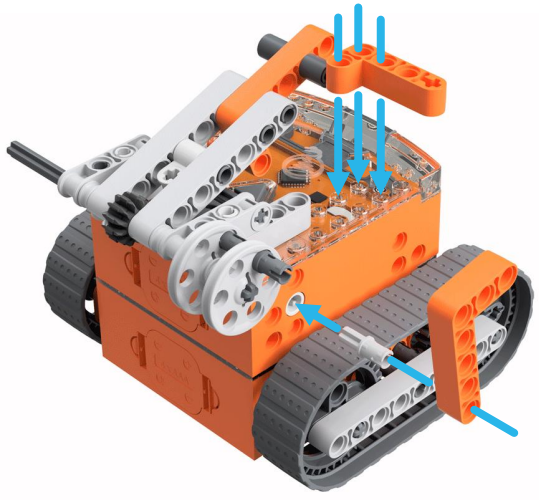

27

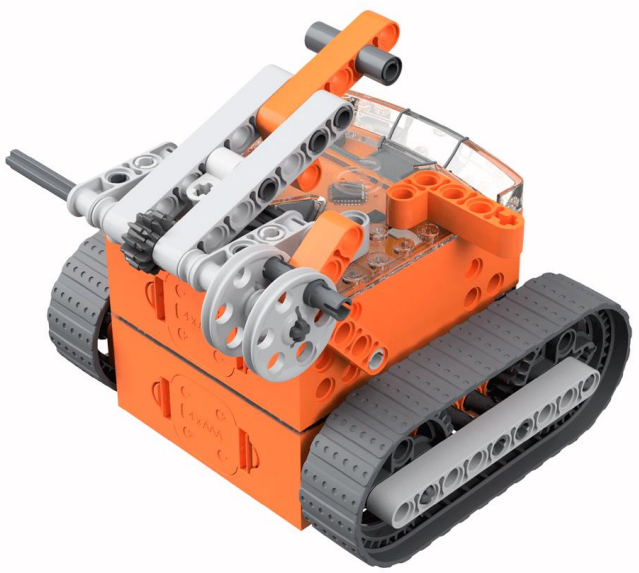

28

1x

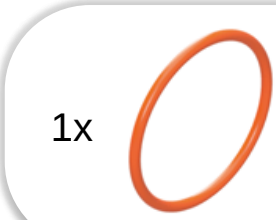

29

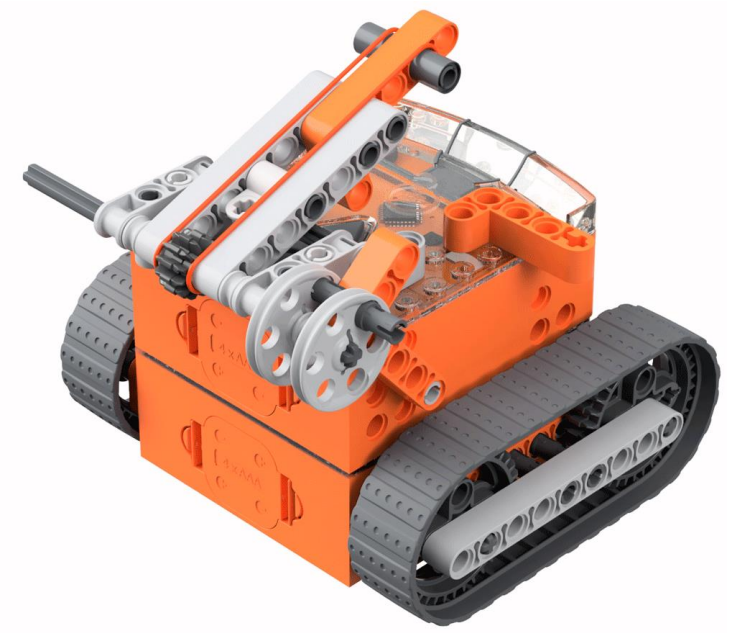

30

Edison
robotics for everyone

EdBuild

Let's build the EdDigger

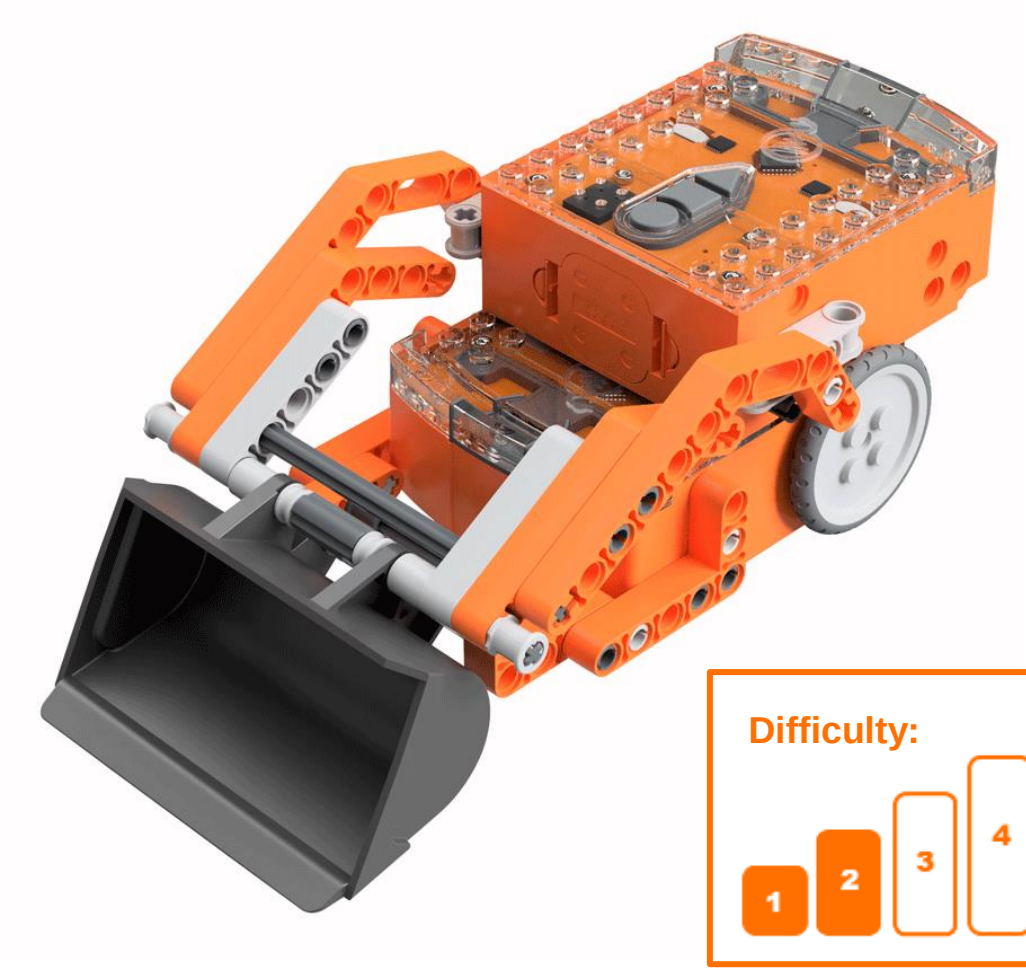

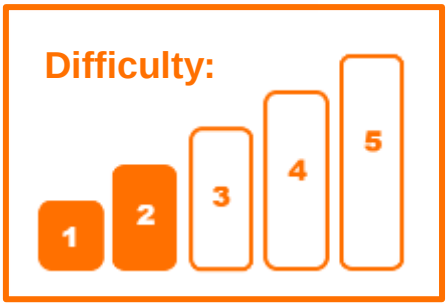

The EdDigger EdBuild by Microbric Education is licensed under a Creative Commons Attribution-ShareAlike 4.0 International License.

EdBuild – the EdDigger

The EdDigger is a remote-controlled excavator, which can be programmed using the barcodes in this guide and controlled with a standard TV or DVD remote control. You will be able to drive the EdDigger forwards, backwards and spin it right or left. You will also be able to lift and lower the scoop bucket.

Build difficulty rating

The EdDigger is rated a level 2 build.

Difficulty rating	Recommended age	Programming skills needed
1	8+	- Barcodes and remote control
2	8+	- Barcodes and remote control
3	8+	- Barcodes and remote control
4	10+	- Barcodes and remote control ***AND*** - EdScratch ***OR*** - EdPy
5	12+	- EdPy

To successfully complete and operate a build, you will need an understanding of the programming skills listed.

Learn more about programming with Edison at:

- **Barcodes:** Appropriate for ages 4+. No prior experience with programming or robotics is assumed or required. www.meetedison.com/robot-activities/youre-a-controller/
- **EdScratch:** Best suited to students aged 10 and up, ideal for students 10 to 13. A basic understanding of programming fundamentals may be helpful. www.meetedison.com/robot-programming-software/edscratch/
- **EdPy:** Best suited to students aged 13 to 16 years old. A basic understanding of programming fundamentals may be helpful. www.meetedison.com/robot-programming-software/edpy/

Get set up

Before you begin this build, check that you have everything you need and that you can do the programming required. It's also a good idea to get familiar with how to build with your Edison robot.

What you need

To make the EdDigger, you will need:

- 2 Edison robots
- 1 EdCreate – Edison robot creator's kit
- 1 TV or DVD remote
- 1 print-out of the 'Bottom Edison' barcodes sheet (from in this guide)
- 1 print-out of the 'Top Edison' barcodes sheet (from in this guide)

Programming required in this build

To program the EdDigger, you will need to program a remote control with six different commands using the barcodes in this guide.

Building with Edison

You can build with Edison using an EdCreate creator's kit or any other LEGO brick compatible building system.

Bricks can be attached to the top and bottom of your Edison robot. Pegs can be attached on the sides of Edison. When Edison's wheels are removed, cross axles can be used in the powered sockets.

There are three types of holes on the side of Edison: pin holes, stud holes, and cross axle sockets. Look at the following images to learn more about how to connect and build with Edison.

Edison's side and top connections

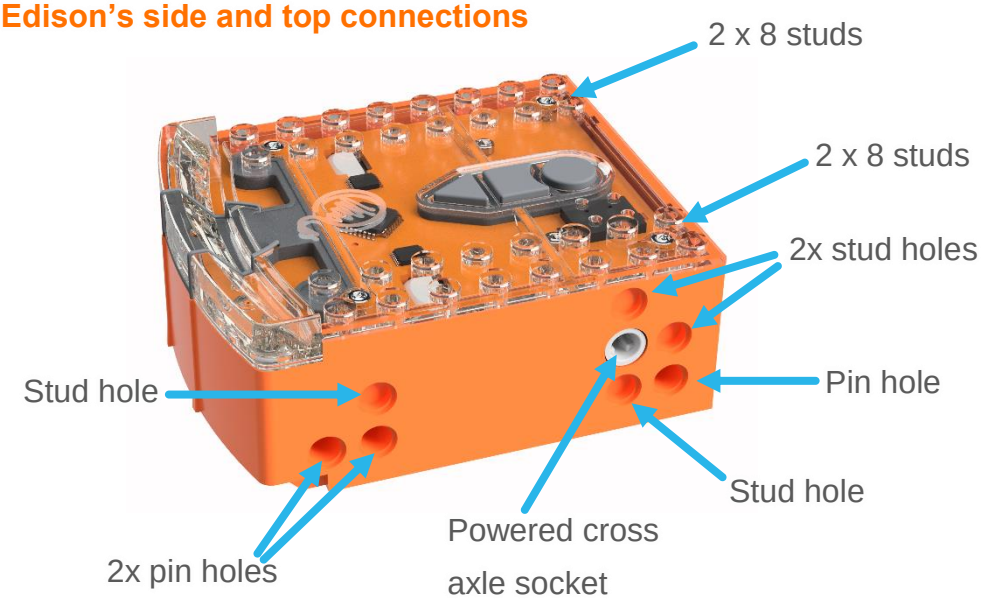

Hole type	Description	Connects to
Pin hole	A full-depth hole for connecting pegs.	
Stud hole	A hole of normal stud-depth which works with half pegs.	
Cross axle socket	A powered socket which rotates.	

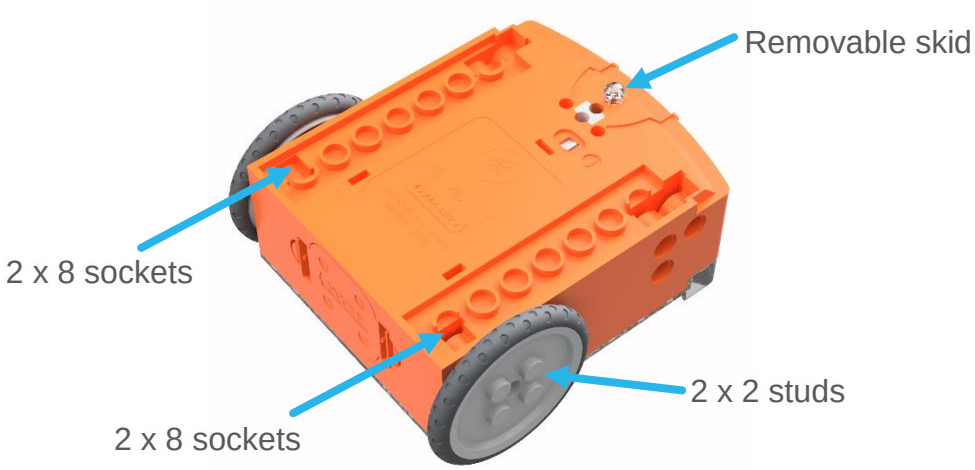

Edison's bottom and wheel connections

Let’s build the EdDigger!

The EdDigger is a remote-controlled excavator, or digger, with a scoop that you can drive around. The digger scoop of the EdDigger can lift or lower and can carry small objects such as parts from the EdCreate kit.

This is what the finished EdDigger looks like:

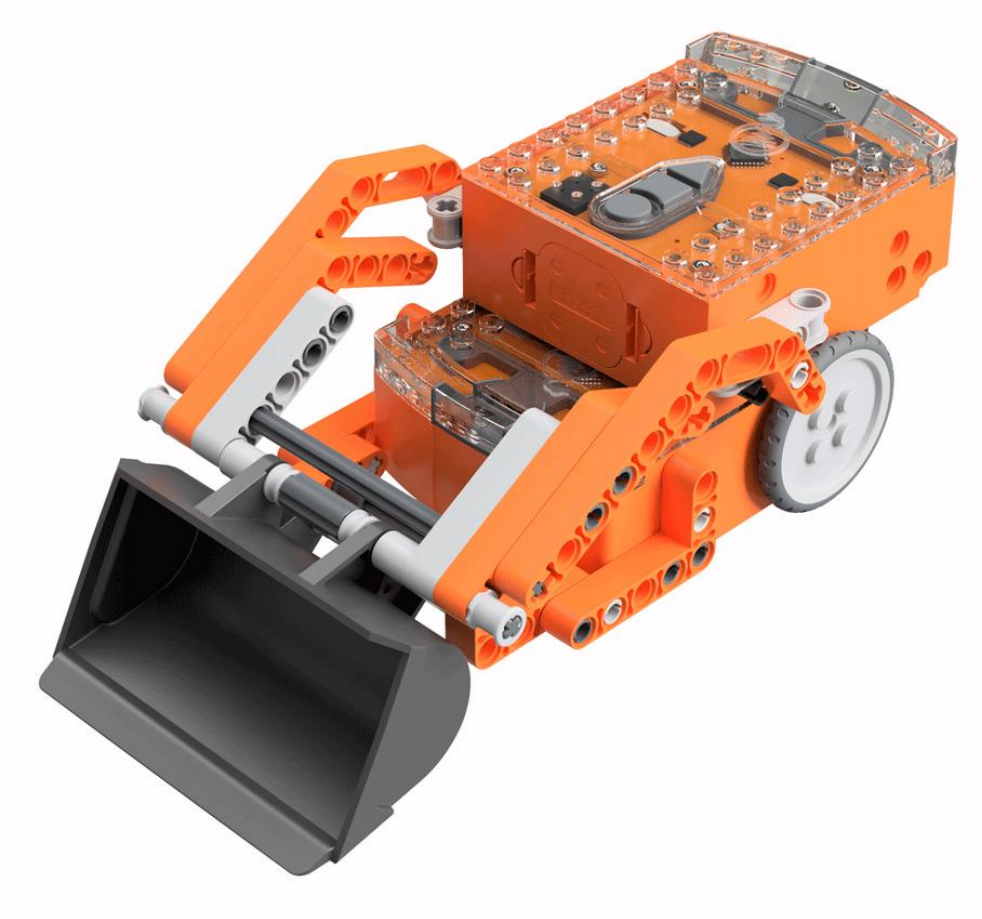

Step 1: Program Edison

Before you begin building with the EdCreate parts, you will need to program the remote-control codes into both Edison robots.

The next two pages have the remote-control barcodes for the bottom and top Edison robots. Print out these pages so you can drive your Edison robots over the barcodes.

Print out this page!

Bottom Edison – barcodes

The bottom Edison is the driving Edison.

Program the driving Edison

The driving Edison will control the movement of the EdDigger (forwards, backwards, spin left and spin right). Drive this Edison over the following barcodes, programming each to a button that corresponds well with the driving manoeuvre on the remote control. Don't use buttons that you want to use to control the scoop bucket.

Reading the barcode

1. Place Edison facing the barcode on the right side
2. Press the record (round) button 3 times
3. Edison will drive forward and scan the barcode
4. Press a button on your TV/DVD remote that you want to activate that function

Barcode – IR learn drive forward

Barcode – IR learn drive backward

Barcode – IR learn spin left

Barcode – IR learn spin right

Print out this page!

Top Edison – barcodes

The top Edison controls the scoop bucket.

You may want to mark the Edison robots so you don't confuse which one is programmed to be the bottom robot and which one is programmed to be the top one while you are building. You can mark one of the Edison's as the 'top' robot by using a spare brick or a piece of tape to indicate it is the top Edison. You can also take the wheels off the top robot as soon as you finish programming this Edison so you won't get confused!

Program the scoop bucket Edison

The scoop bucket Edison will control lifting and lowering the bucket. Drive this Edison over the following barcodes, programming each to a button that corresponds well with the lifting or lowering the scoop bucket on the remote control. Don't use buttons that you used to control how the EdDigger drives.

Reading the barcode

1. Place Edison facing the barcode on the right side
2. Press the record (round) button 3 times
3. Edison will drive forward and scan the barcode
4. Press a button on your TV/DVD remote that you want to activate that function

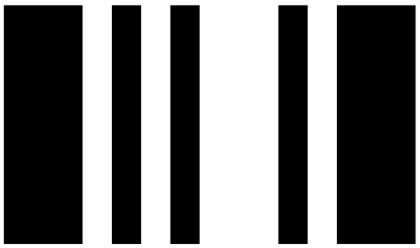

Barcode – IR learn bucket lift up

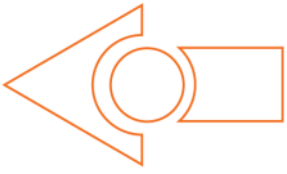

Barcode – IR learn bucket lower down

Suggested remote control button setup for the EdDigger

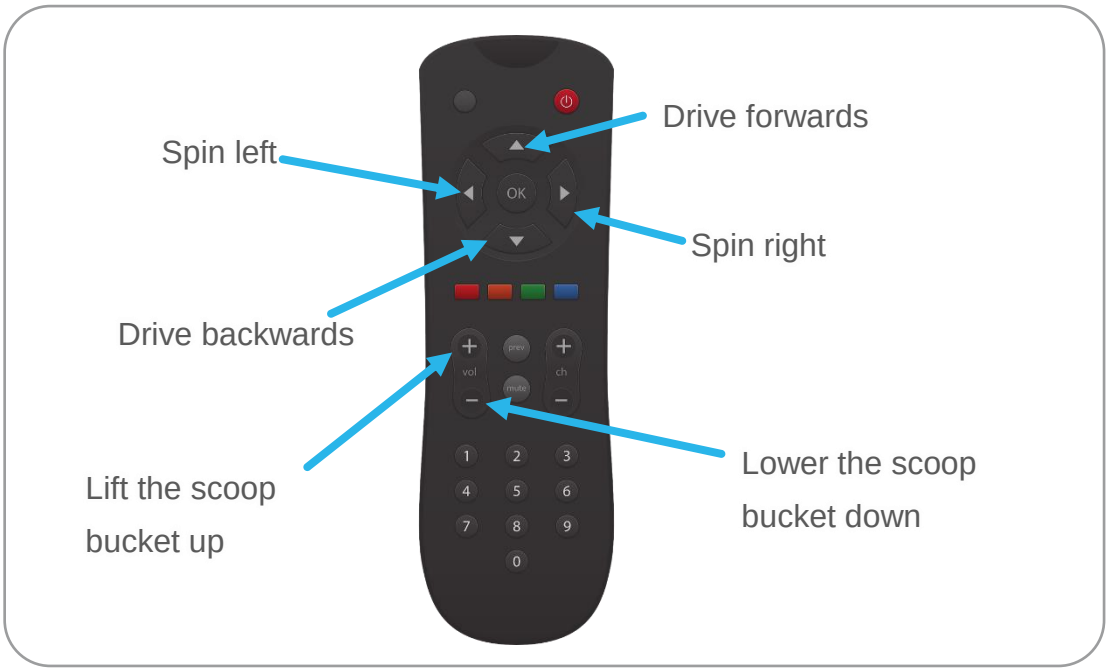

Step 2: Assemble the EdDigger

Follow the illustrations step by step to build the EdDigger.

Reading the instructions:

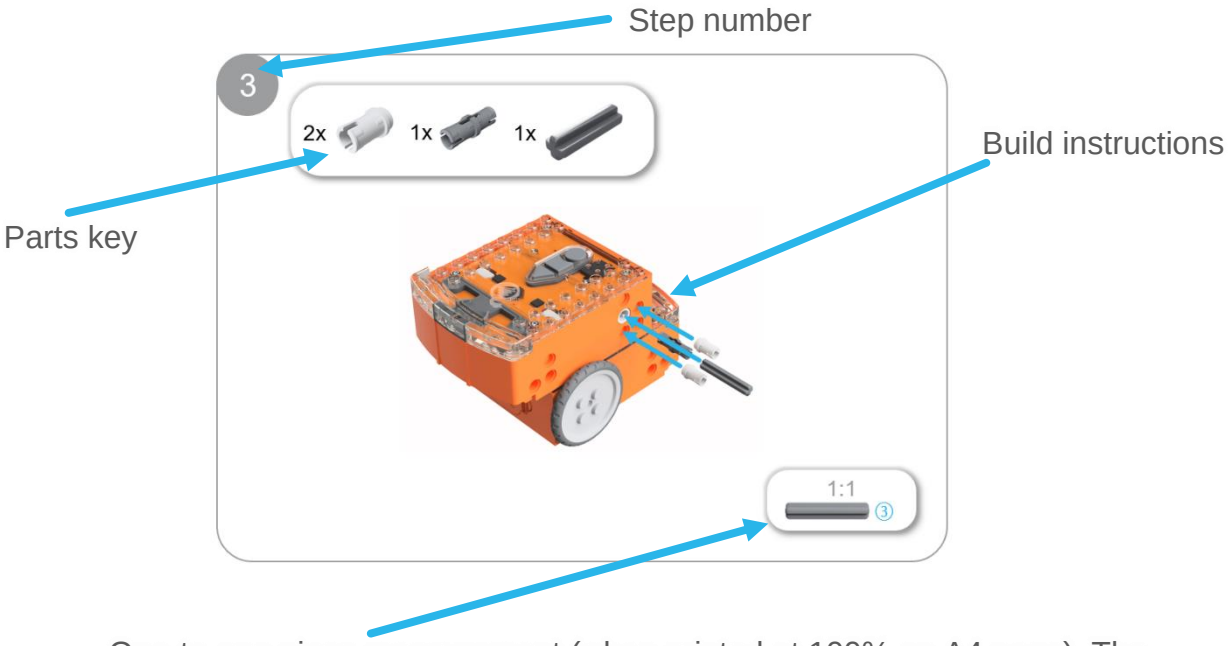

One-to-one piece measurement (when printed at 100% on A4 page). The number in the circle indicates the part's length in number of studs.

1

1x 2x

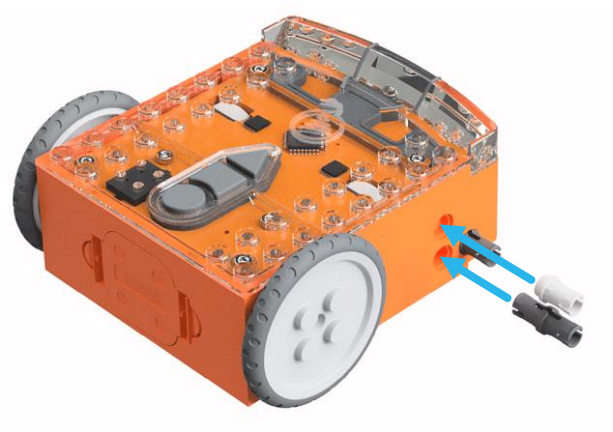

2

1x 2x

3

2x 1x 2x 1x

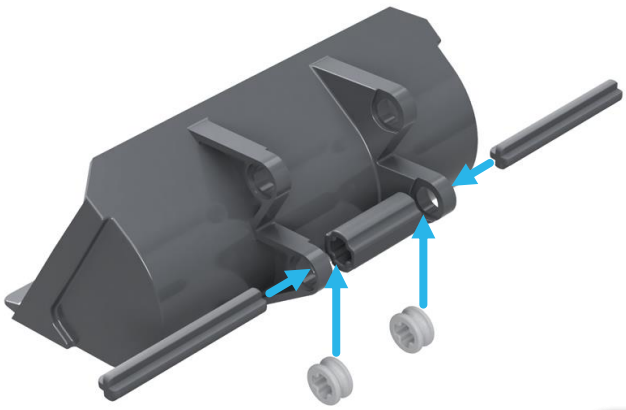

1:1 ④

4

2x

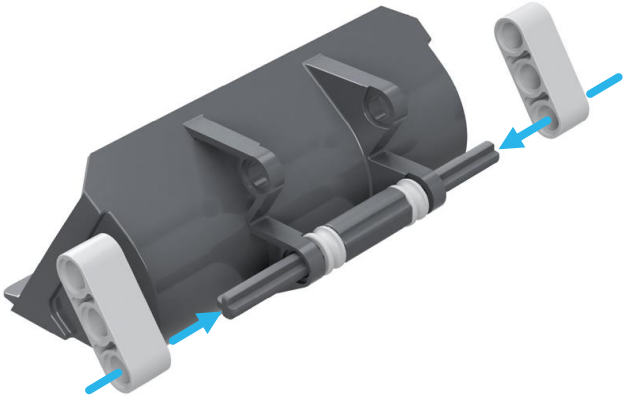

1:1 ③

5

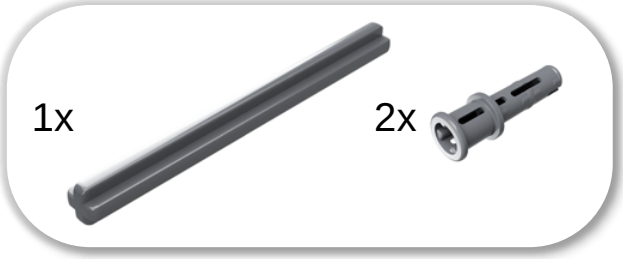

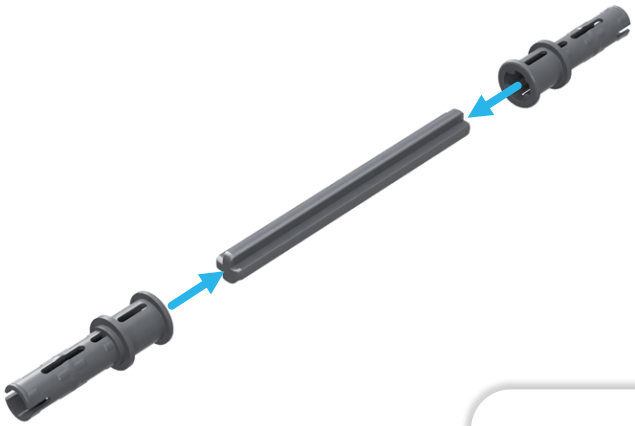

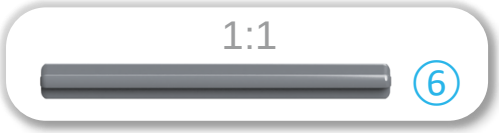

6

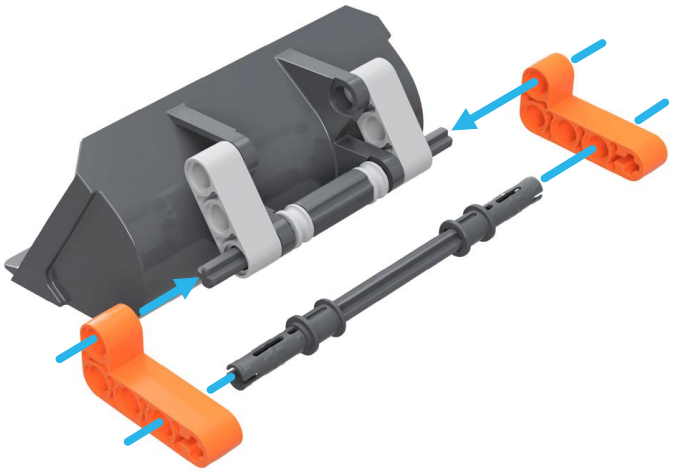

7

2x 1x 2x

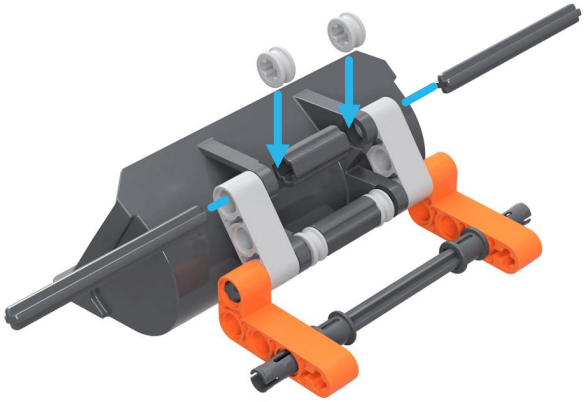

1:1 ⑥

8

2x

9

2x 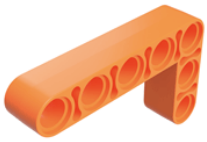

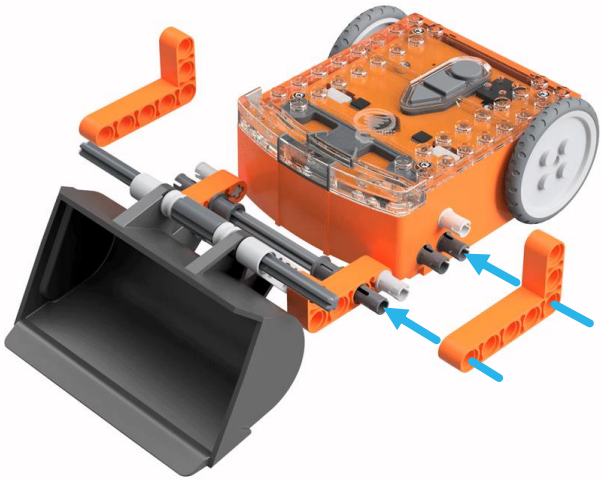

10

4x 2x 2x 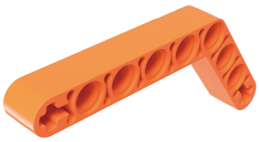

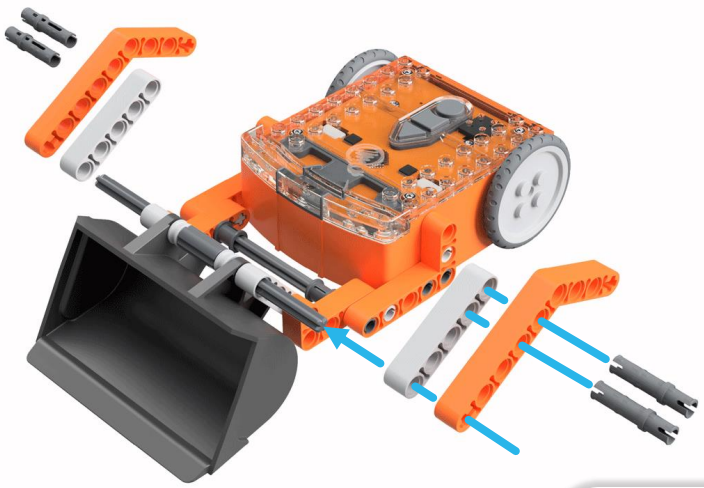

1:1

11

2x

1x

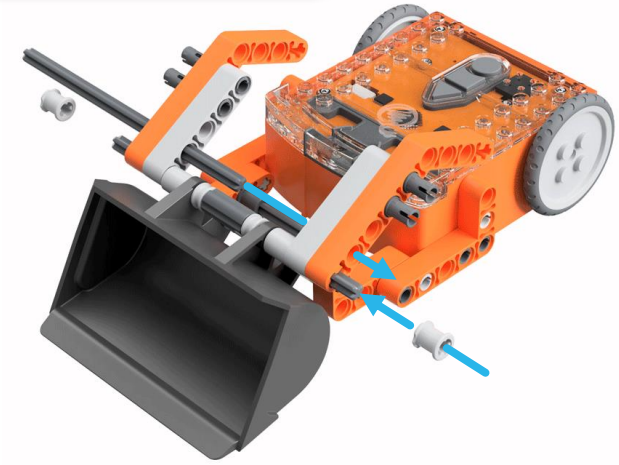

1:1

12

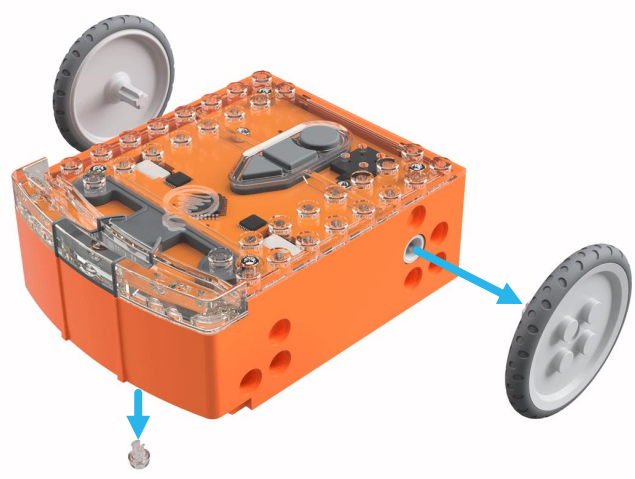

13

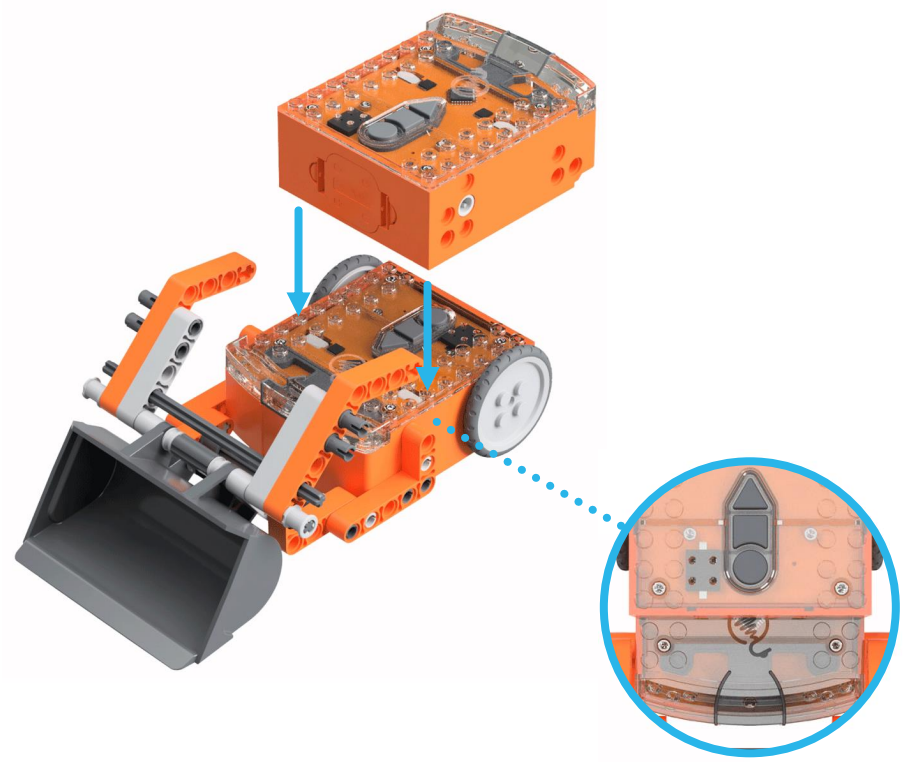

14

2x 2x

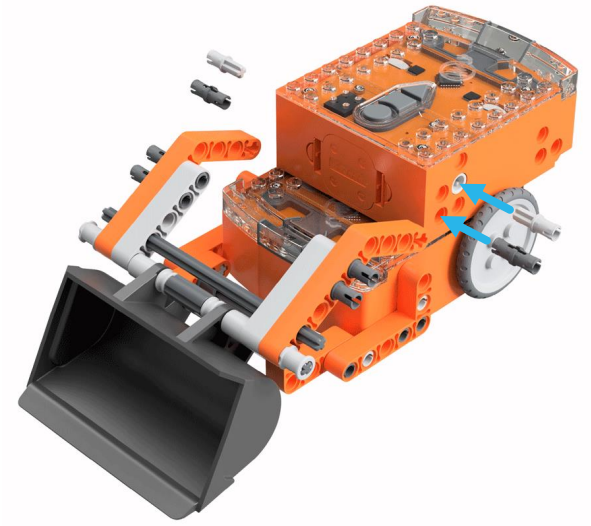

15

2x

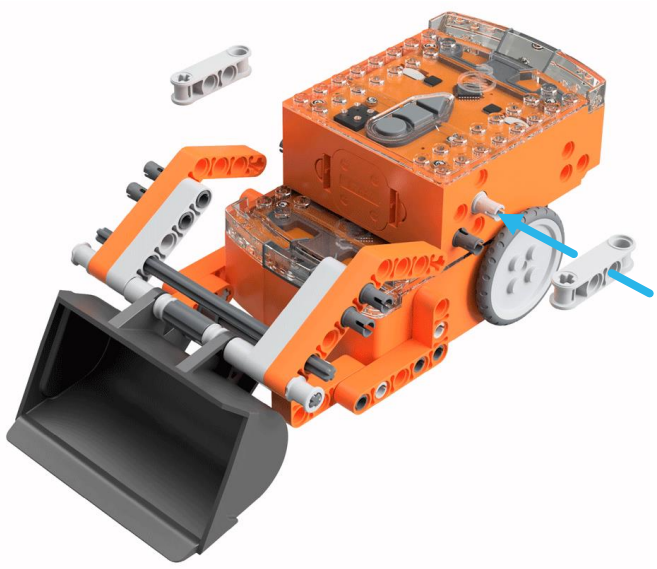

16

2x

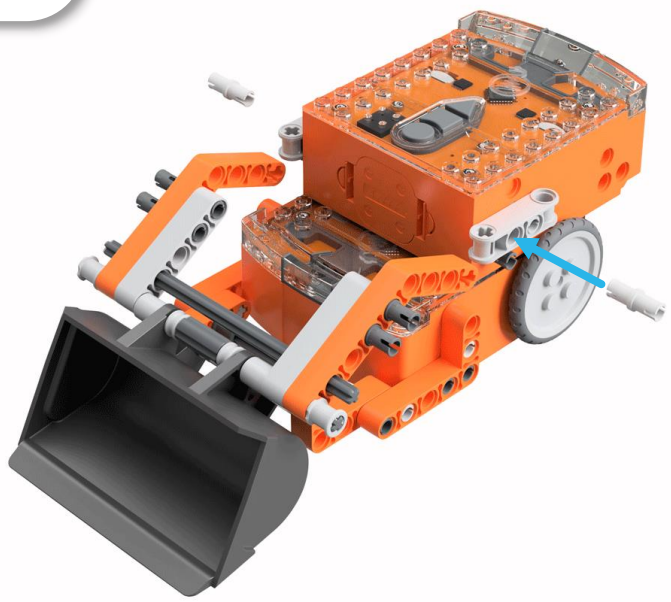

17

2x

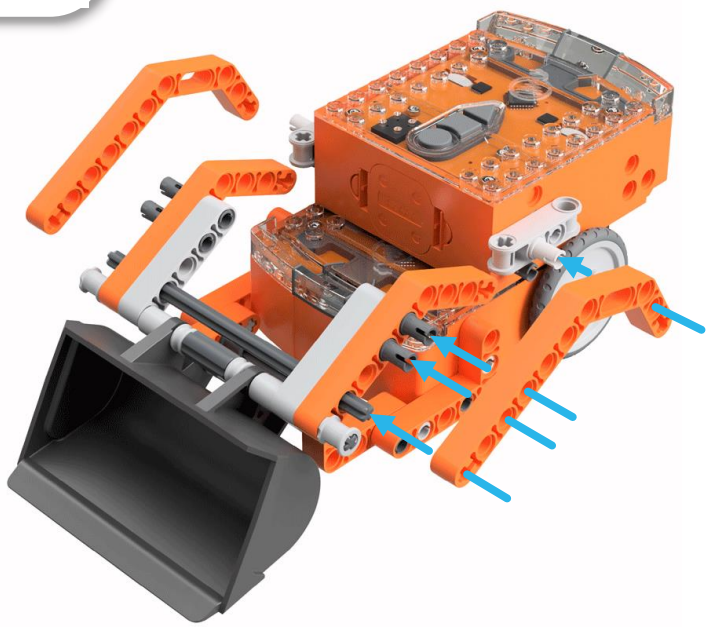

18

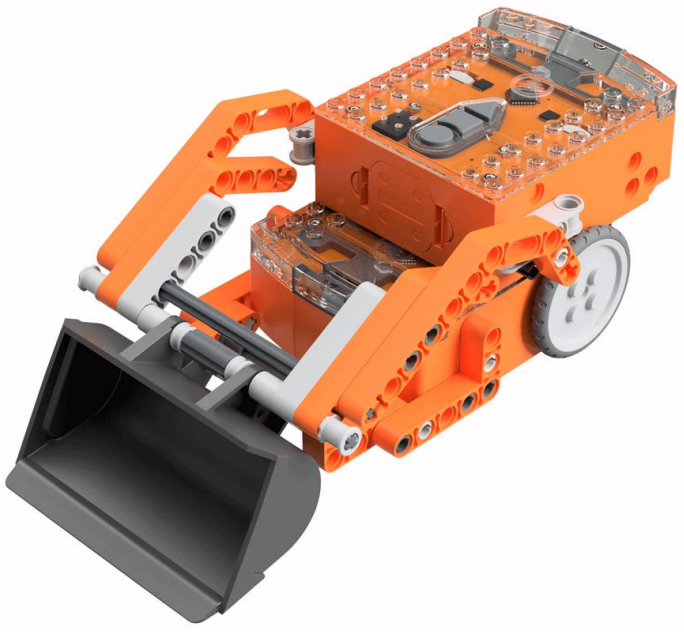

Edison
robotics for everyone

EdBuild

Let's build the EdRoboClaw

The EdRoboClaw EdBuild by Microbric Education is licensed under a Creative Commons Attribution-ShareAlike 4.0 International License.

EdBuild – the EdRoboClaw

The EdRoboClaw is a remote-controlled articulated robotic arm, which can be programmed using the barcodes in this guide and controlled with a standard TV or DVD remote control. You will be able to drive the EdRoboClaw forwards, backwards and spin it right or left. You will also be able to open and close the claw to pick up and carry an object, such as one of the EdCreate beams.

Build difficulty rating

The EdRoboClaw is rated a level 3 build.

Difficulty rating	Recommended age	Programming skills needed
1	8+	- Barcodes and remote control
2	8+	- Barcodes and remote control
3	8+	- Barcodes and remote control
4	10+	- Barcodes and remote control ***AND*** - EdScratch ***OR*** - EdPy
5	12+	- EdPy

To successfully complete and operate a build, you will need an understanding of the programming skills listed.

Learn more about programming with Edison at:

- **Barcodes:** Appropriate for ages 4+. No prior experience with programming or robotics is assumed or required. www.meetedison.com/robot-activities/youre-a-controller/
- **EdScratch:** Best suited to students aged 10 and up, ideal for students 10 to 13. A basic understanding of programming fundamentals may be helpful. www.meetedison.com/robot-programming-software/edscratch/
- **EdPy:** Best suited to students aged 13 to 16 years old. A basic understanding of programming fundamentals may be helpful. www.meetedison.com/robot-programming-software/edpy/

Get set up

Before you begin this build, check that you have everything you need and that you can do the programming required. It's also a good idea to get familiar with how to build with your Edison robot.

What you need

To make the EdRoboClaw, you will need:

- 2 Edison robots
- 1 EdCreate – Edison robot creator's kit
- 1 TV or DVD remote
- 1 print-out of the 'Bottom Edison' barcodes sheet (from in this guide)
- 1 print-out of the 'Top Edison' barcodes sheet (from in this guide)

Programming required in this build

To program the EdRoboClaw, you will need to program a remote control with six different commands using the barcodes in this guide.

Building with Edison

You can build with Edison using an EdCreate creator's kit or any other LEGO brick compatible building system.

Bricks can be attached to the top and bottom of your Edison robot. Pegs can be attached on the sides of Edison. When Edison's wheels are removed, cross axles can be used in the powered sockets.

There are three types of holes on the side of Edison: pin holes, stud holes, and cross axle sockets. Look at the following images to learn more about how to connect and build with Edison.

Edison's side and top connections

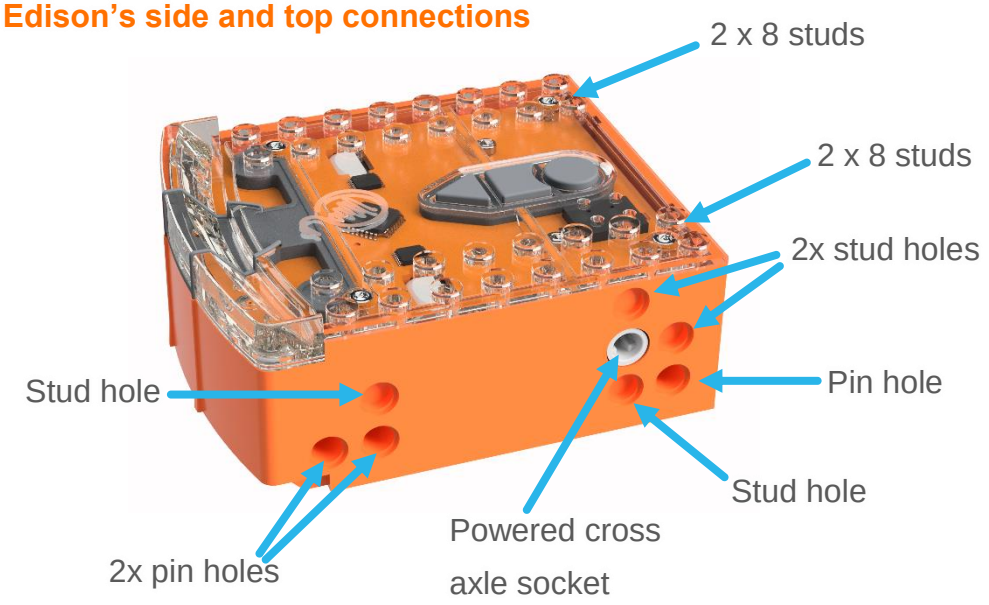

Hole type	Description	Connects to
Pin hole	A full-depth hole for connecting pegs.	
Stud hole	A hole of normal stud-depth which works with half pegs.	
Cross axle socket	A powered socket which rotates.	

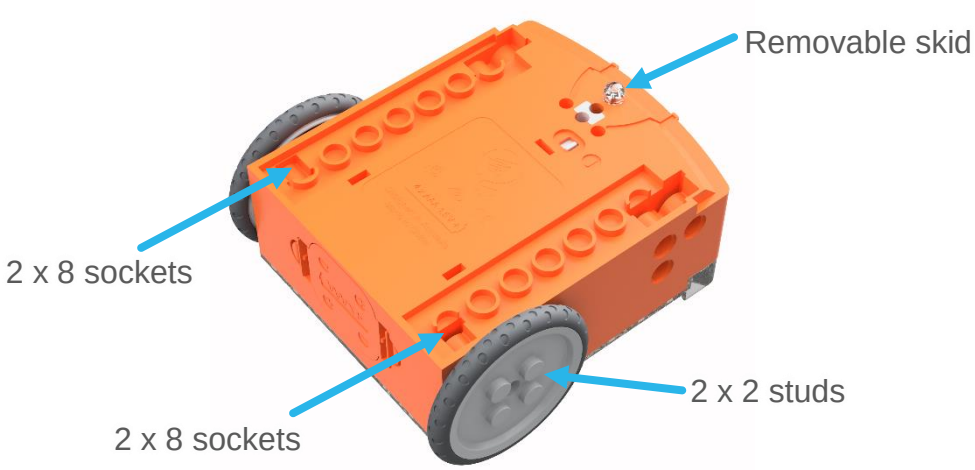

Edison's bottom and wheel connections

Let’s build the EdRoboClaw!

The EdRoboClaw is a remote-controlled robotic arm with a moving base that you can drive around. The robotic arm of the EdRoboClaw can open and close to pick up and carry objects such as the grey 7-hole long beam from the EdCreate kit.

This is what the finished EdRoboClaw looks like:

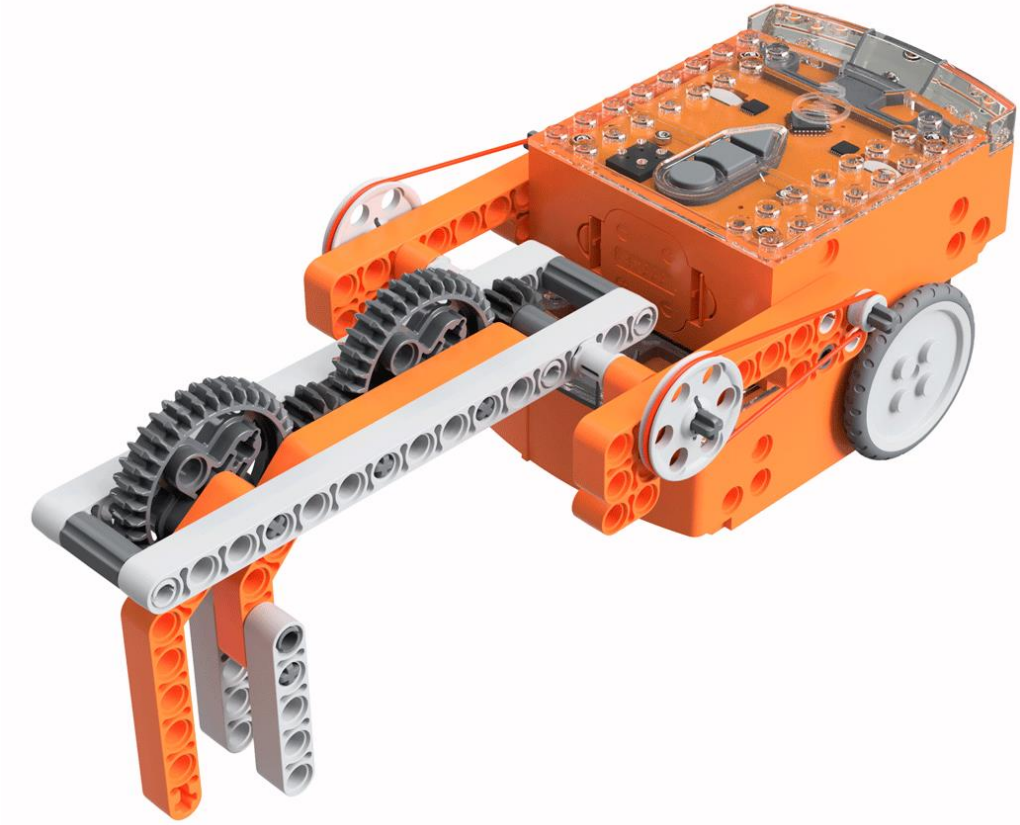

Step 1: Program Edison

Before you begin building with the EdCreate parts, you will need to program the remote-control codes into both Edison robots.

The next two pages have the remote-control barcodes for the bottom and top Edison robots. Print out these pages so you can drive your Edison robots over the barcodes.

Print out this page!

Bottom Edison – barcodes

The bottom Edison is the driving Edison.

Program the driving Edison

The driving Edison will control the movement of the EdRoboClaw (forwards, backwards, spin left and spin right). Drive this Edison over the following barcodes, programming each to a button that corresponds well with the driving manoeuvre on the remote control. Don't use buttons that you want to use to control the robotic claw.

Reading the barcode

1. Place Edison facing the barcode on the right side
2. Press the record (round) button 3 times
3. Edison will drive forward and scan the barcode
4. Press a button on your TV/DVD remote that you want to activate that function

Barcode – IR learn drive forward

Barcode – IR learn drive backward

Barcode – IR learn spin left

Barcode – IR learn spin right

Print out this page!

Top Edison – barcodes

The top Edison controls the robotic claw arm.

You may want to mark the Edison robots so you don't confuse which one is programmed to be the bottom robot and which one is programmed to be the top one while you are building. You can mark one of the Edison's as the 'top' robot by using a spare brick or a piece of tape to indicate it is the top Edison. You can also take the wheels off the top robot as soon as you finish programming this Edison so you won't get confused!

Program the claw arm Edison

The claw arm Edison will control the articulated robotic arm. Drive this Edison over the following barcodes, programming each to a button that corresponds well with the open or close manoeuvre on the remote control. Don't use buttons that you used to control how the EdRoboClaw drives.

Reading the barcode

1. Place Edison facing the barcode on the right side
2. Press the record (round) button 3 times
3. Edison will drive forward and scan the barcode
4. Press a button on your TV/DVD remote that you want to activate that function

Barcode – IR learn Claw Arm close claw and pick up

Barcode – IR learn Claw Arm drop down and open claw

Suggested remote control button setup for the EdRoboClaw

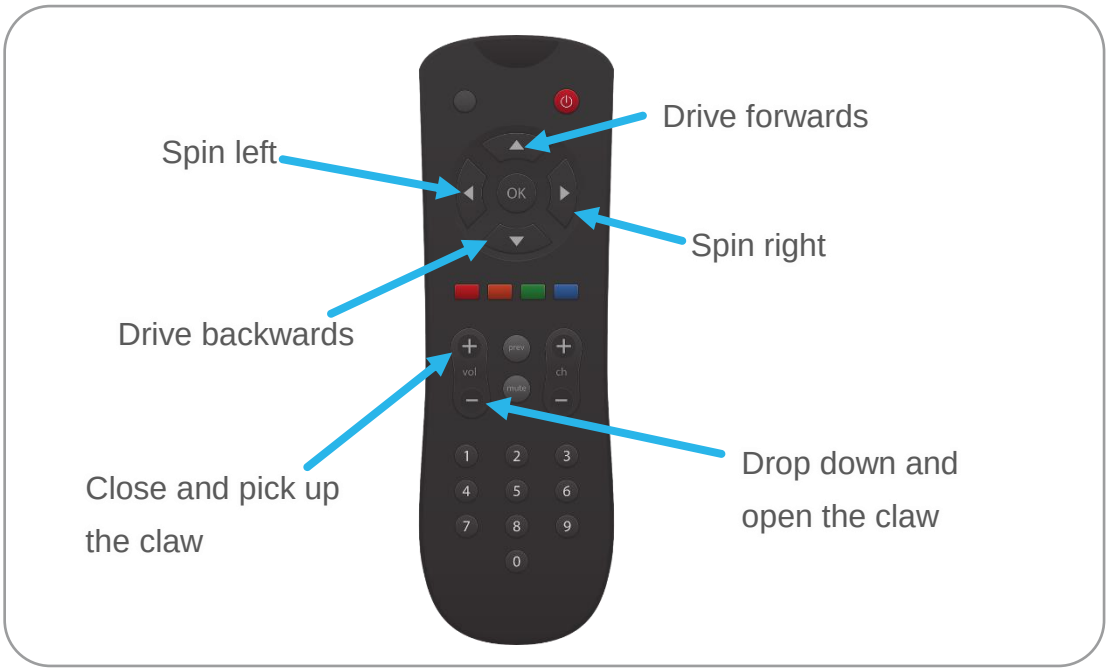

Step 2: Assemble the EdRoboClaw

Follow the illustrations step by step to build the EdRoboClaw.

Reading the instructions:

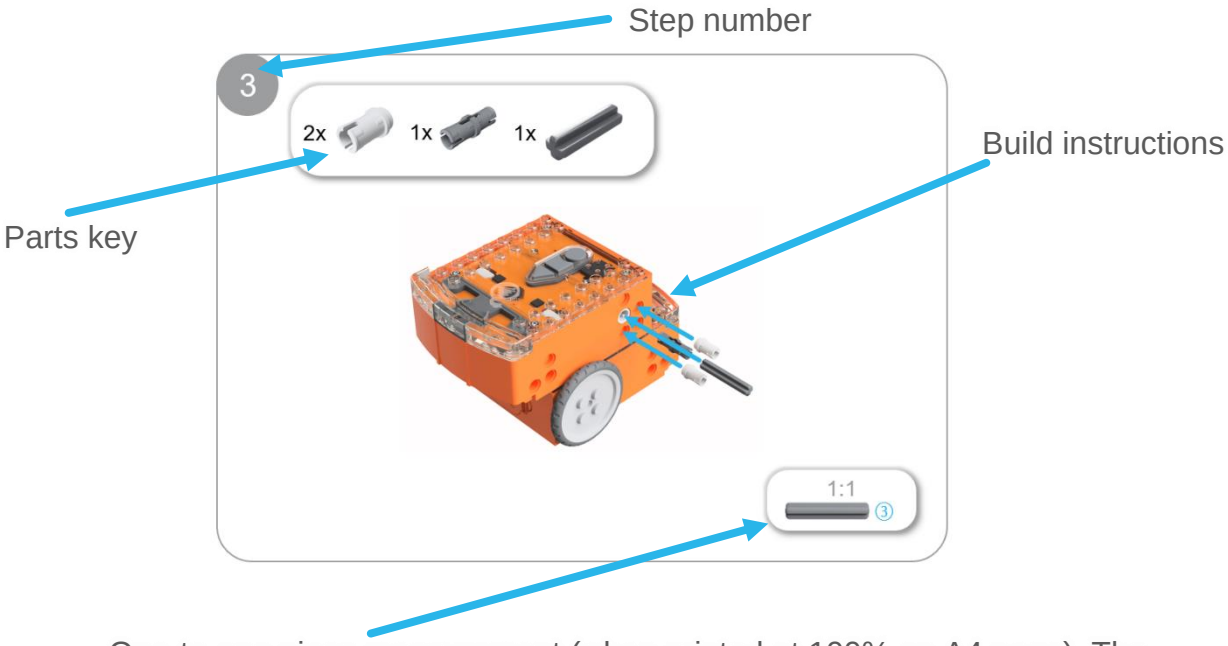

One-to-one piece measurement (when printed at 100% on A4 page). The number in the circle indicates the part's length in number of studs.

1

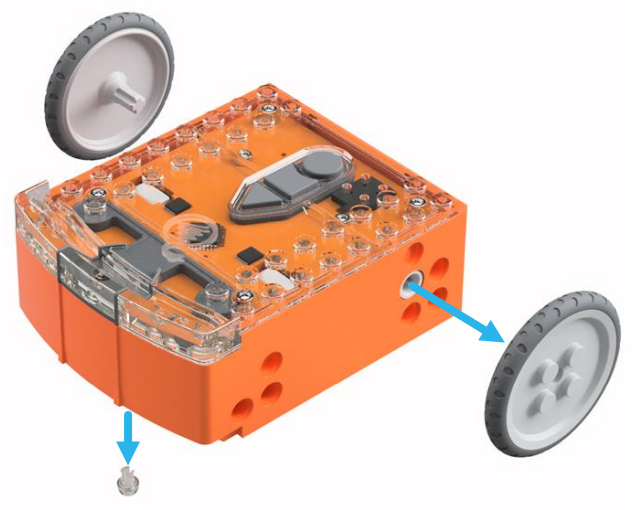

2

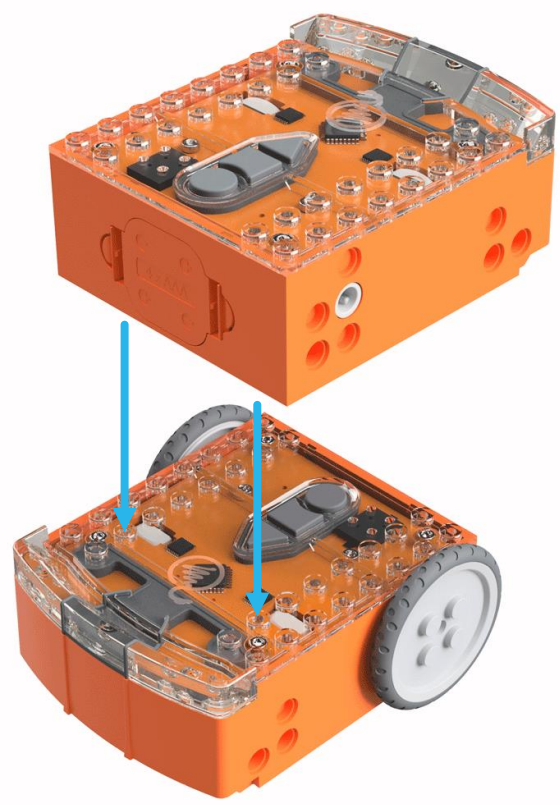

3

2x 1x 1x 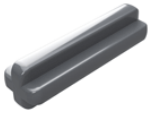

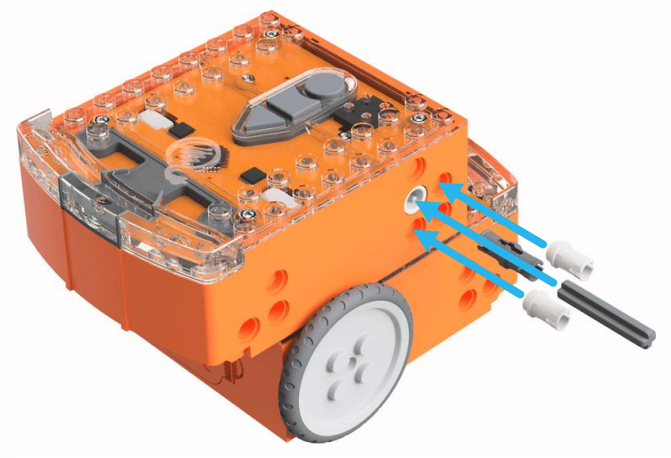

1:1

③

4

1x 1x 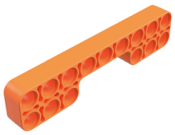 1x 1x

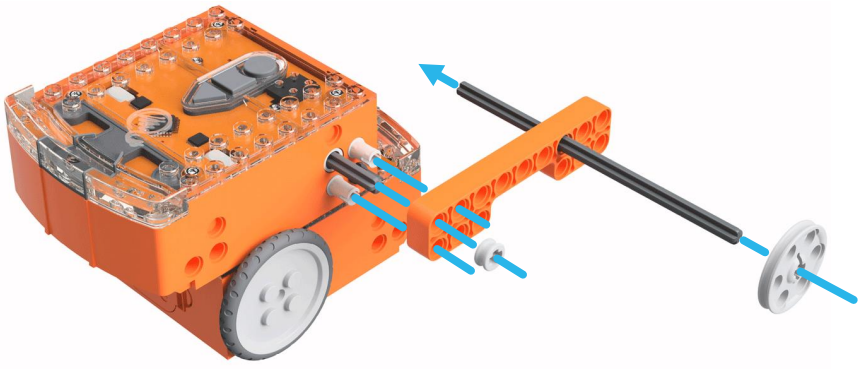

1:1

⑫

5

2x x1 x1

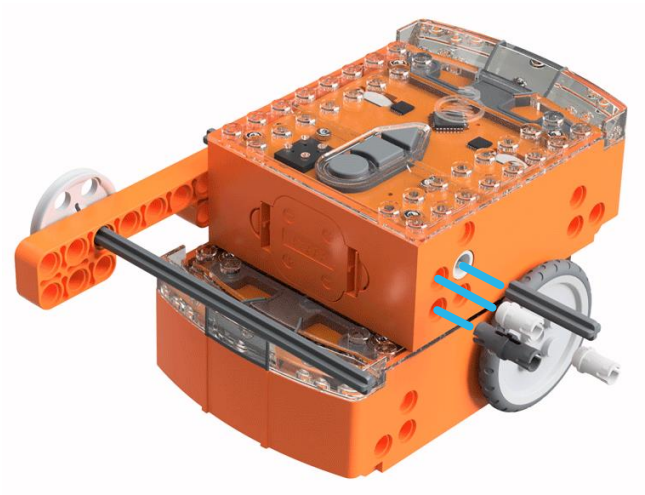

1:1 ③

6

1x 1x

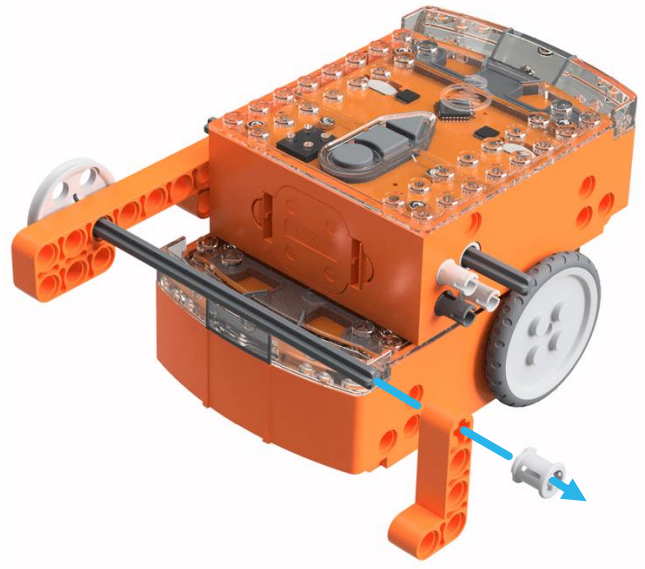

7

1x 2x 1x

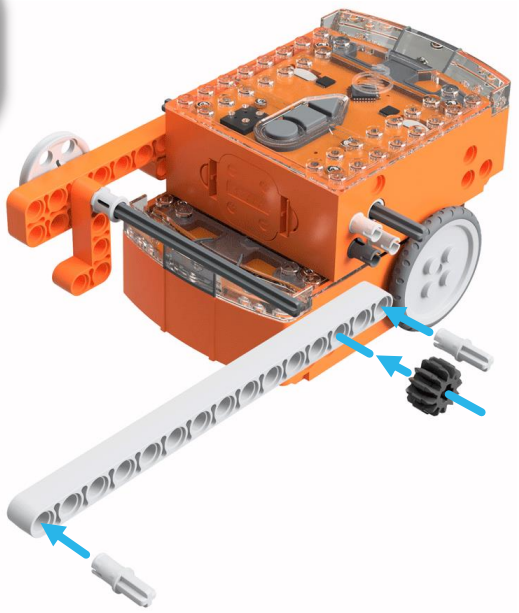

1:1

15

8

2x 1x 3x 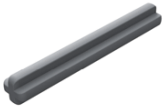

1:1

4

9

1x 1x 1x

10

3x 2x 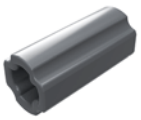

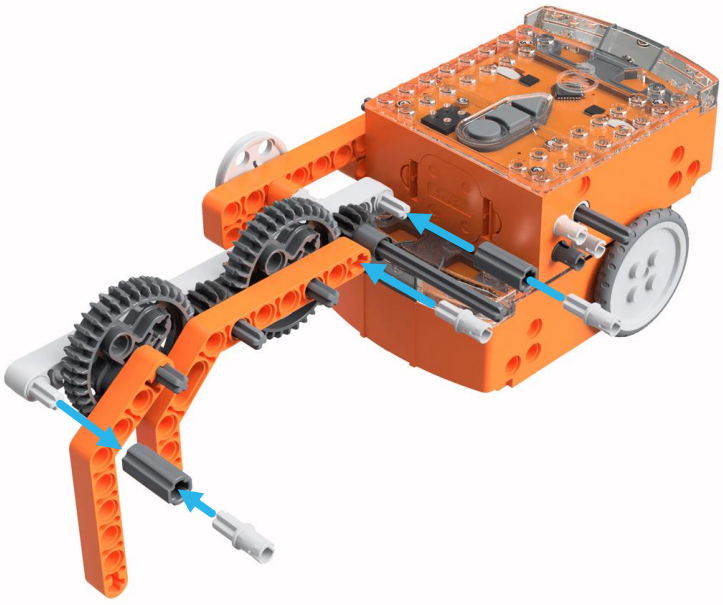

11

1x 1x 1x

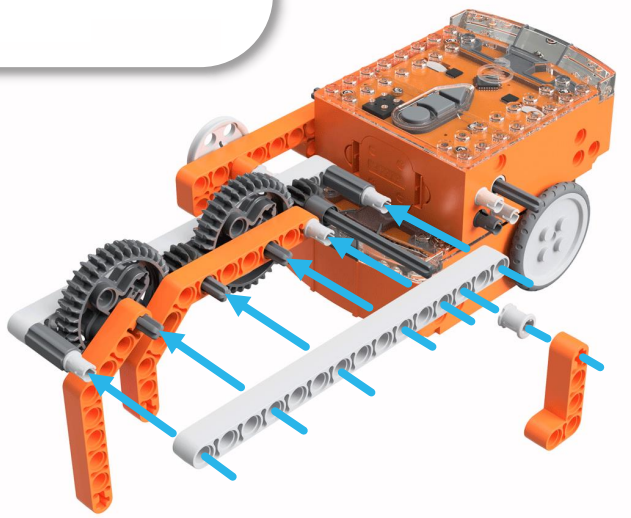

1:1

⑮

12

1x 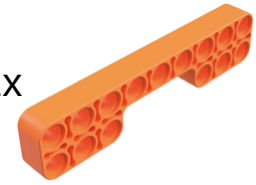 1x 1x

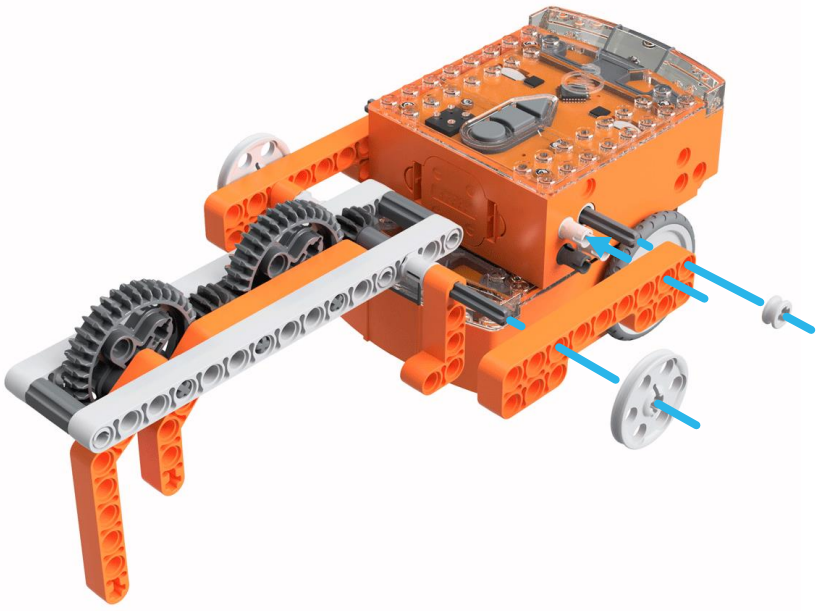

13

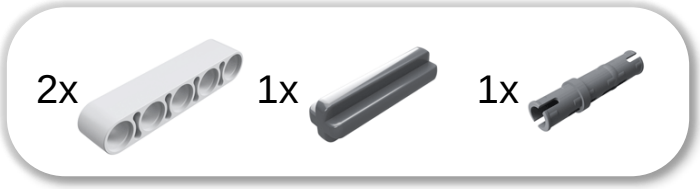

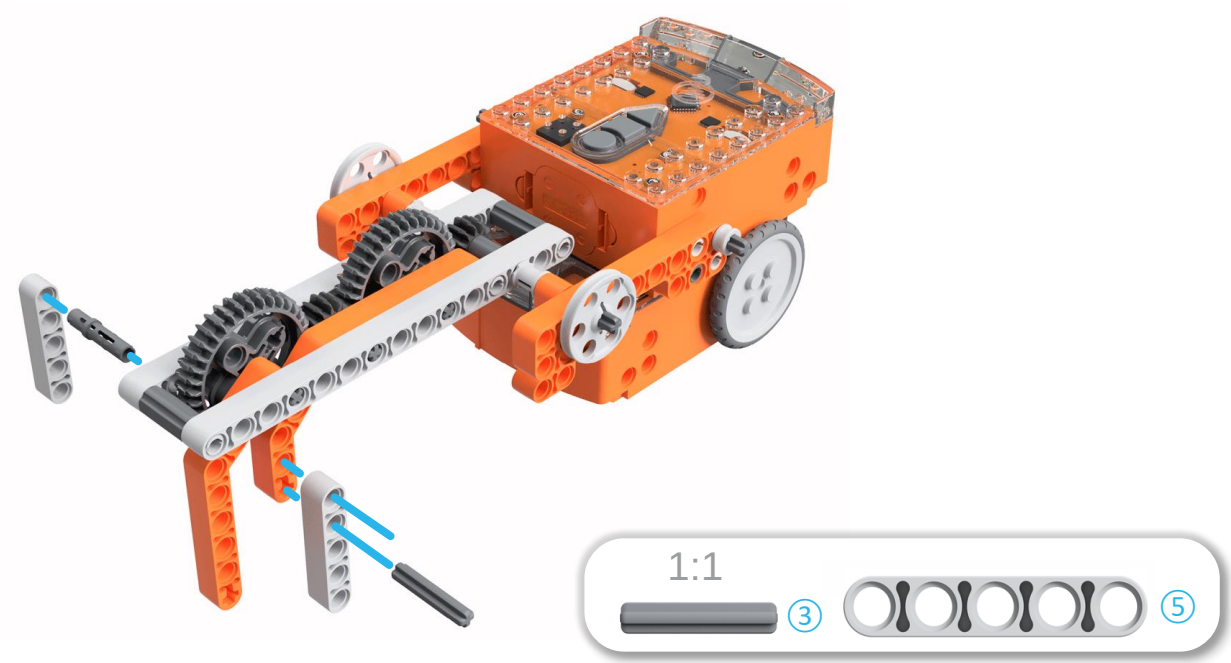

14

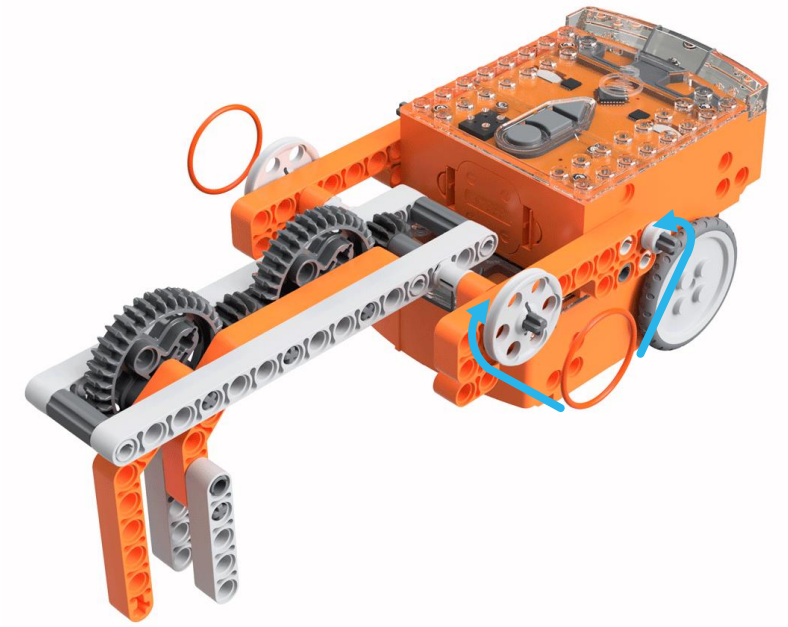

15

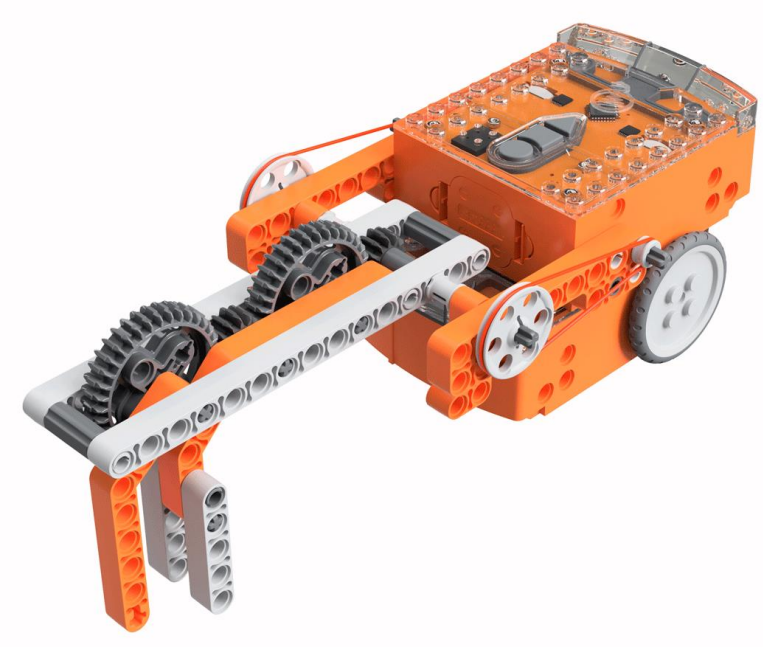

Edison
robotics for everyone

EdBuild

Let's build the EdCrane

The EdCrane EdBuild by Microbric Education is licensed under a Creative Commons Attribution-ShareAlike 4.0 International License.

EdBuild – the EdCrane

The EdCrane is a remote-controlled crane which can be programmed using the barcodes in this guide plus a downloadable program and controlled with a standard TV or DVD remote control. You will be able to turn the crane clockwise or counter-clockwise on its base. You will also be able to lift and lower the magnetic 'hook'.

Build difficulty rating

The EdCrane is rated a level 4 build.

Difficulty rating	Recommended age	Programming skills needed
1	8+	- Barcodes and remote control
2	8+	- Barcodes and remote control
3	8+	- Barcodes and remote control
4	10+	- Barcodes and remote control ***AND*** - EdScratch ***OR*** - EdPy
5	12+	- EdPy

To successfully complete and operate a build, you will need an understanding of the programming skills listed.

Learn more about programming with Edison at:

- **Barcodes:** Appropriate for ages 4+. No prior experience with programming or robotics is assumed or required. www.meetedison.com/robot-activities/youre-a-controller/
- **EdScratch:** Best suited to students aged 10 and up, ideal for students 10 to 13. A basic understanding of programming fundamentals may be helpful. www.meetedison.com/robot-programming-software/edscratch/
- **EdPy:** Best suited to students aged 13 to 16 years old. A basic understanding of programming fundamentals may be helpful. www.meetedison.com/robot-programming-software/edpy/

Get set up

Before you begin this build, check that you have everything you need and that you can do the programming required. It's also a good idea to get familiar with how to build with your Edison robot.

What you need

To make the EdCrane, you will need:

- 1 Edison robot
- 1 EdCreate – Edison robot creator's kit
- 1 TV or DVD remote
- 1 print-out of the barcodes sheet (from in this guide)
- Access to a computer with an internet connection

It is recommended that the magnetic hook used in the EdCrane be pre-assembled before beginning this build by and adult or under adult supervision. As this hook uses a real magnet, it is important to keep this hook and the small parts it contains away from children under 3 years of age. Please see the section on building the magnetic hook in this guide for details.

Programming required in this build

To program the EdCrane, you will need to program a remote control with four different commands using the barcodes in this guide.

You will also need to program the Edison robot using either the EdScratch or the EdPy robotic programming language. Links to the programs you need are provided in this guide.

Building with Edison

You can build with Edison using an EdCreate creator's kit or any other LEGO brick compatible building system.

Bricks can be attached to the top and bottom of your Edison robot. Pegs can be attached on the sides of Edison. When Edison's wheels are removed, cross axles can be used in the powered sockets.

There are three types of holes on the side of Edison: pin holes, stud holes, and cross axle sockets. Look at the following images to learn more about how to connect and build with Edison.

Edison's side and top connections

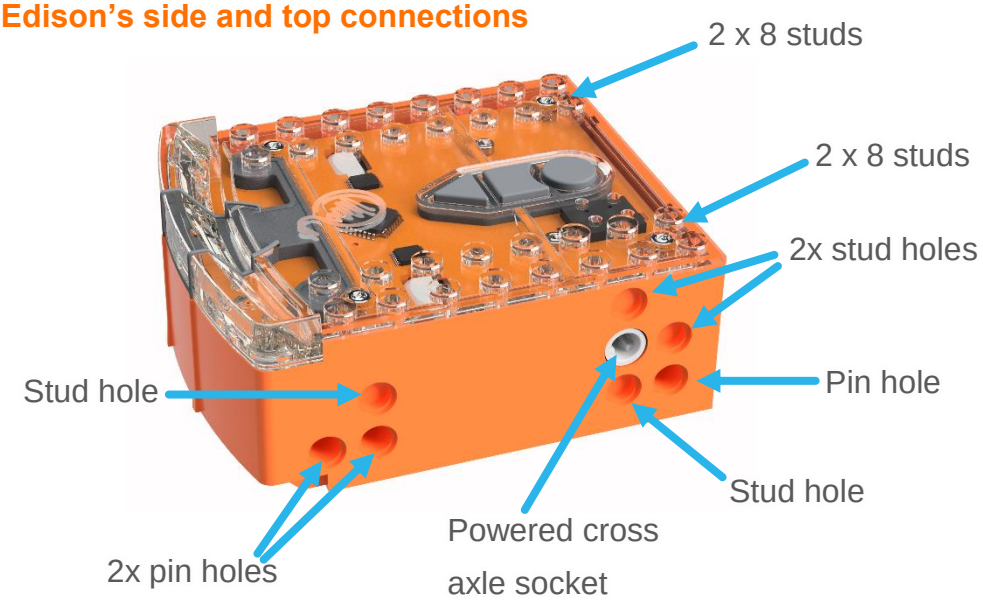

Hole type	Description	Connects to
Pin hole	A full-depth hole for connecting pegs.	
Stud hole	A hole of normal stud-depth which works with half pegs.	
Cross axle socket	A powered socket which rotates.	

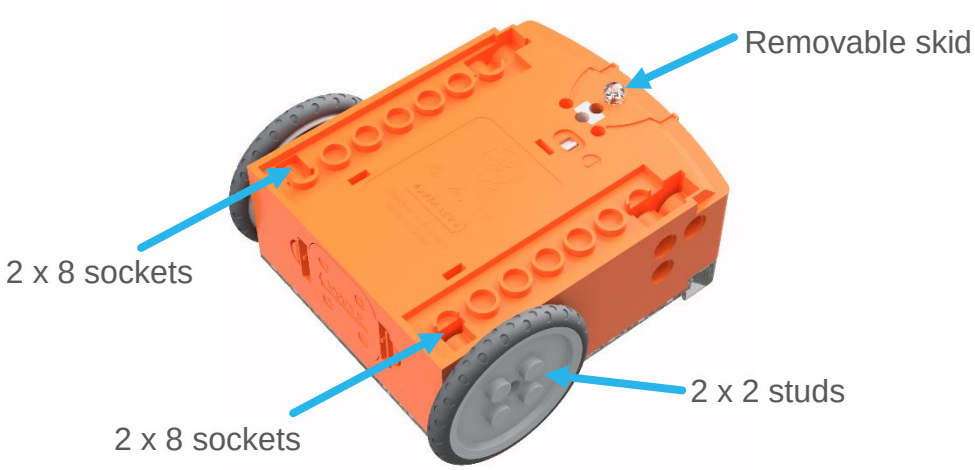

Edison's bottom and wheel connections

Let’s build the EdCrane!

The EdCrane is a remote-controlled crane with a magnetic hook which you can raise and lower. The magnetic hook of the EdCrane can lift or lower small ferrous-metal objects, such as metal paper clips or small screws. The EdCreate kit includes a metal peg which can be attached to one of the parts from the EdCreate kit, such as a 3-hole beam, and used with the magnetic hook.

This is what the finished EdCrane, using the magnetic hook, looks like:

Step 1: Program Edison

How the EdCrane is programmed

Before you begin building with the EdCreate parts, you will need to program the remote control codes into the Edison robot using the barcodes in this guide.

Like other EdCreate EdBuilds, the EdCrane responds to a TV or DVD remote control. However, the EdCrane does not use the barcodes in the same way. Instead, the EdCrane uses remote control commands in combination with a downloaded program which you will also need. The downloaded program tells the EdCrane what action to perform when a specific remote code is detected.

You will need to download the remote control program into the Edison robot using either EdScratch or EdPy. You can do this before or after you build the crane.

Program the barcodes

The next page has the remote control barcodes for the Edison robot. Print out this page so you can drive your Edison robot over the barcodes.

N.B. – These remote control barcodes are the same ones used to drive Edison robots remotely. As such, when you first pair the robot to a button, it will react by demonstrating the default behaviour of that barcode. For example, 'TV/DVD remote code #1' defaults to 'drive backwards'.

Once you download your program and press the play (triangle) button on the robot, the robot will run the programmed action instead of the barcode default.

Suggested remote control button setup for the EdCrane

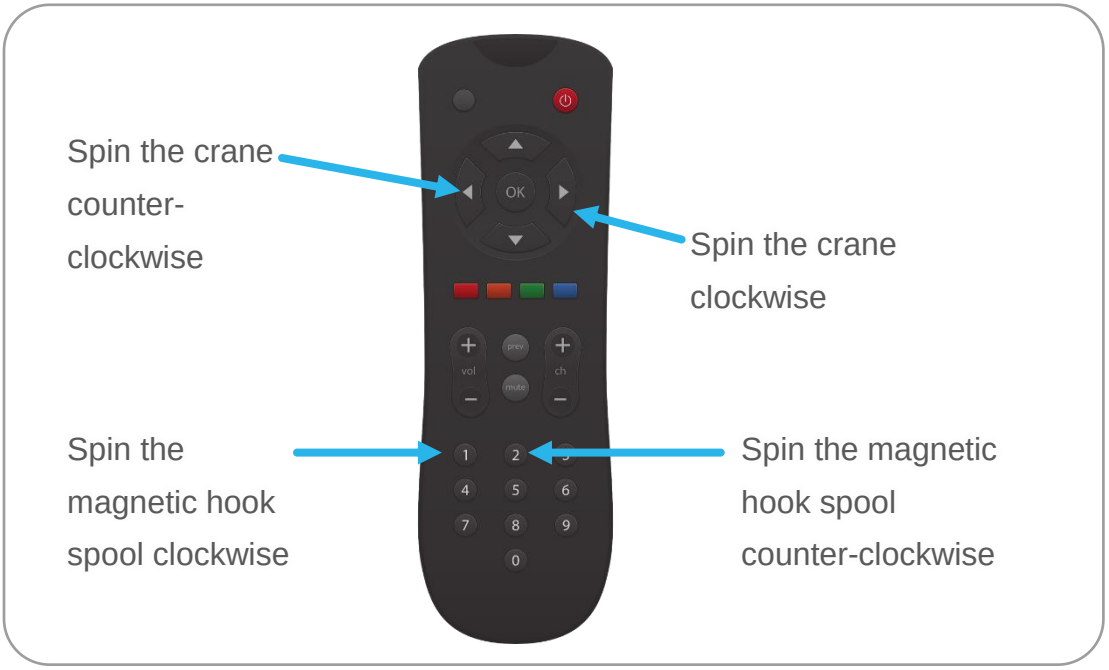

Print out this page!

Programming Edison – barcodes

The crane uses one Edison robot which needs to be programmed with four barcodes.

The Edison robot will control the movement of the EdCrane on its base (spin clockwise and spin counter-clockwise) and the movement of the spool which winds the magnetic hook clockwise or counter-clockwise in order to raise or lower the hook. Drive your Edison over the following barcodes, programming each to a button on the remote control.

Reading the barcode

1. Place Edison facing the barcode on the right side
2. Press the record (round) button 3 times
3. Edison will drive forward and scan the barcode
4. Press a button on your TV/DVD remote that you want to activate that function

Barcode – TV/DVD remote code #1 – spin magnetic hook spool clockwise

Barcode – TV/DVD remote code #2 – spin magnetic hook spool counter-clockwise

Barcode – TV/DVD remote code #3 – spin EdCrane counter-clockwise

Barcode – TV/DVD remote code #4 – spin EdCrane clockwise

Programming Edison – downloading a program

You can download the remote-control command program into the EdCrane using either EdScratch or EdPy.

EdScratch – available at www.edscratchapp.com

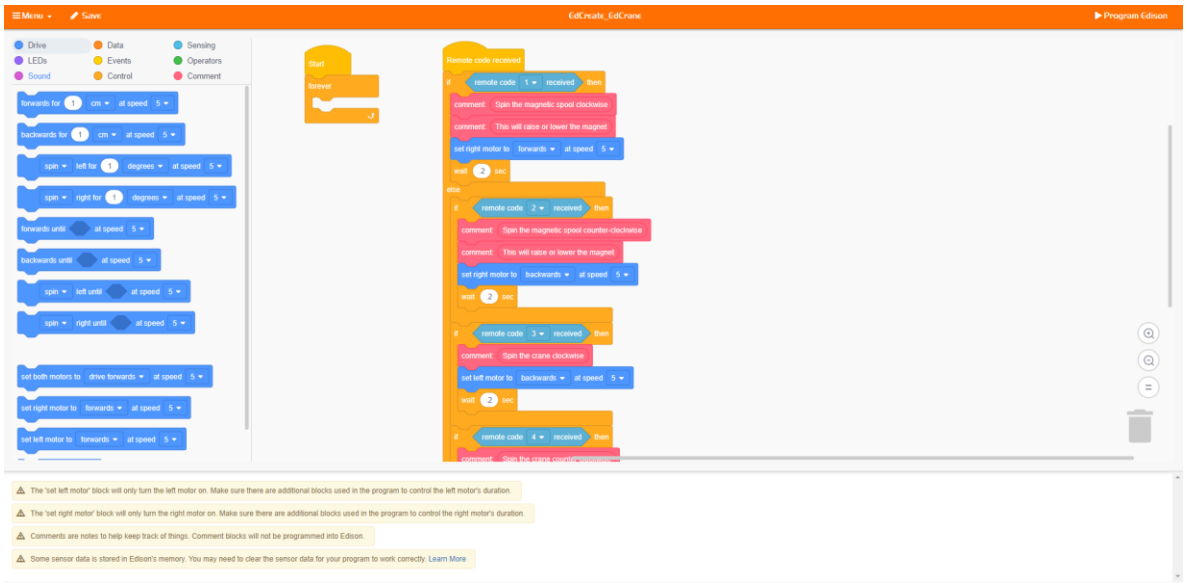

Use the share code https://www.edscratchapp.com?share=5DMQ3XDw to open the official EdCrane program in EdScratch. You can download this program as-is into your Edison robot. You can also use this program as a base to make your own EdCrane program.

EdPy – available at www.edpyapp.com

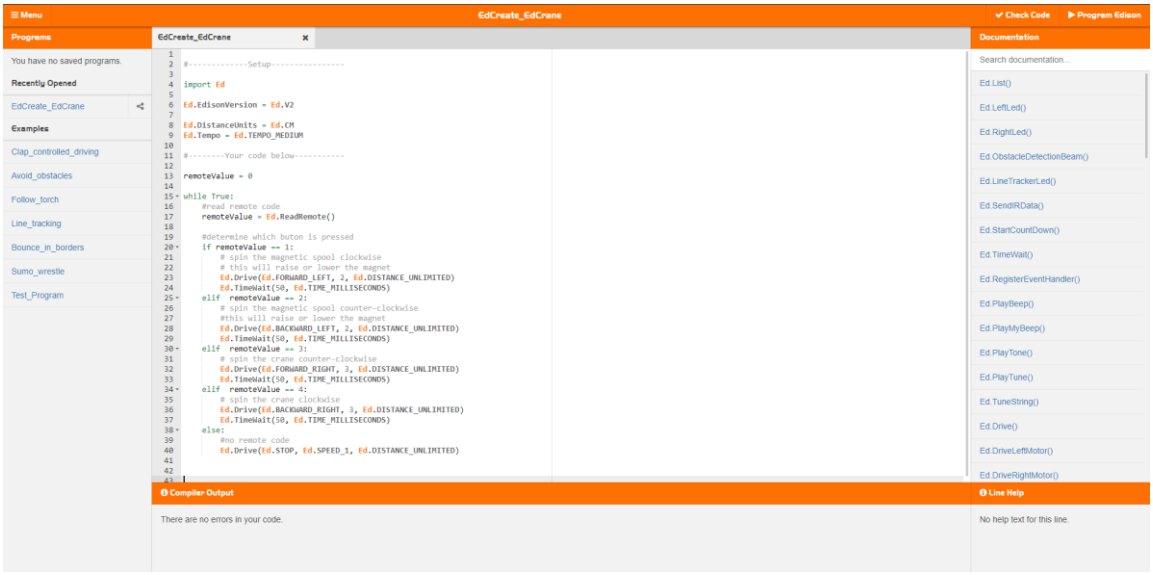

Use the share code www.edpyapp.com/share/99ihb to open the official EdCrane program in EdPy. You can download this program as-is into your Edison robot. You can also use this program as a base to make your own EdCrane program.

Step 2: Assemble the EdCrane's magnetic hook

Before building the EdCrane, it is recommended that you set up the magnetic hook.

To set up the magnetic hook, you need three of the pieces from the EdCreate kit: the string, the magnet and the hook case.

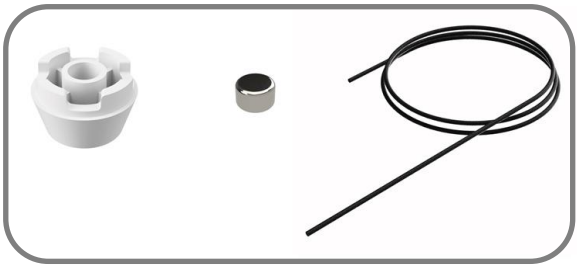

The magnet and string, along with the metal peg for use with the magnetic hook, come in a small bag which you will need scissors to open.

Keep the contents of this bag away from young children to ensure they do not swallow the magnet.

Steps to set up the magnetic hook

1. Feed one end of the string into the top of the hook case.
2. Make a knot in the string near the end of the string. Check that the knot is tight and cannot be pulled back up through the hook case. Double-knot if needed.
3. Push the magnet into the hole in the bottom of the hook case, no more than 0.5cm from the end of the string, trapping the knot and string inside. All of the string needs to be behind the magnet inside of the cavity in the hook case. Trim off excess string below the knot if required. See image:

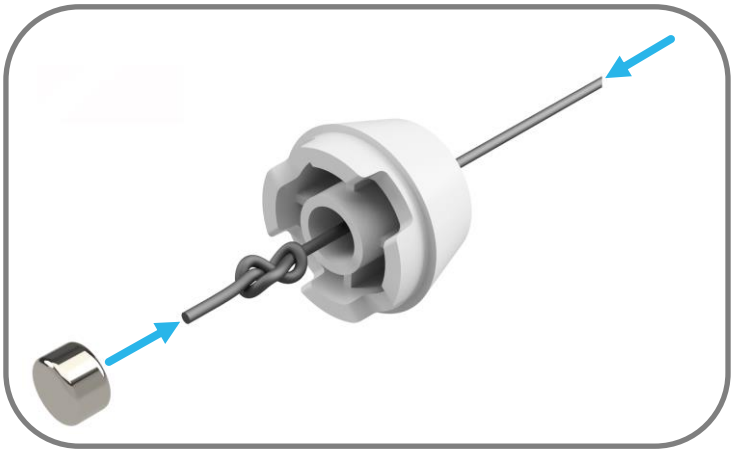

4. Make a second knot in the string near to opposite end of the string (away from the hook). This will be used to anchor that end of the string in place on the spool by sliding it into the groove in the pulley piece. (Refer to step 10 in the build for further details.) See image:

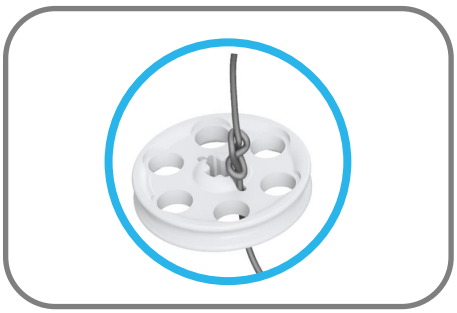

Step 3: Assemble the EdCrane

Follow the illustrations step by step to build the EdCrane.

Reading the instructions:

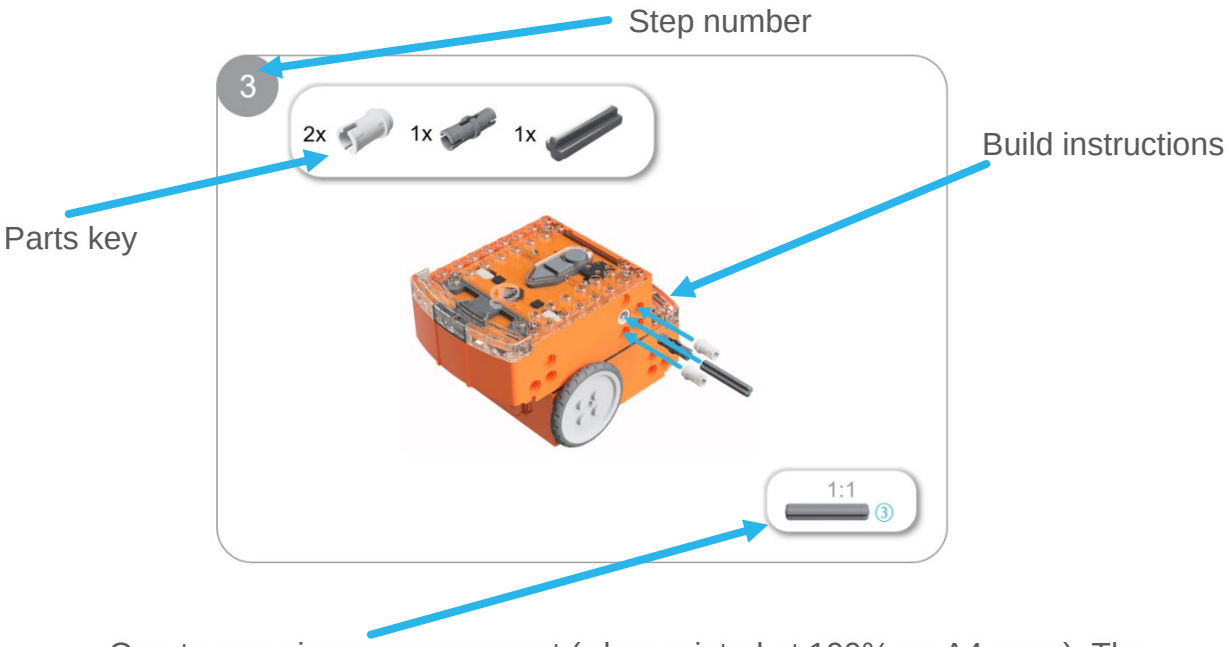

One-to-one piece measurement (when printed at 100% on A4 page). The number in the circle indicates the part's length in number of studs.

1

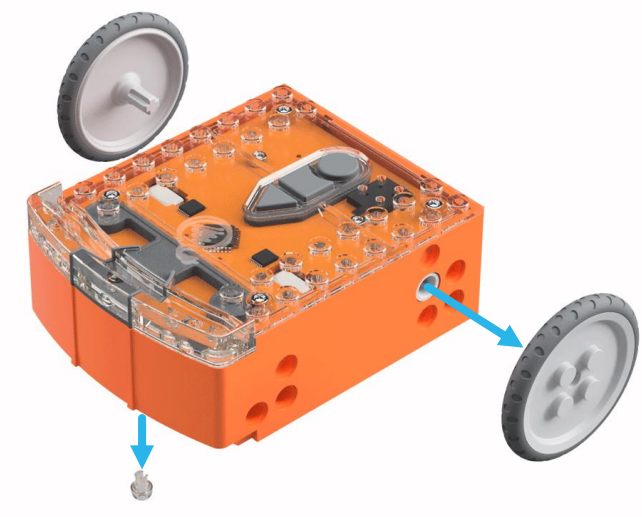

2

3x

2x

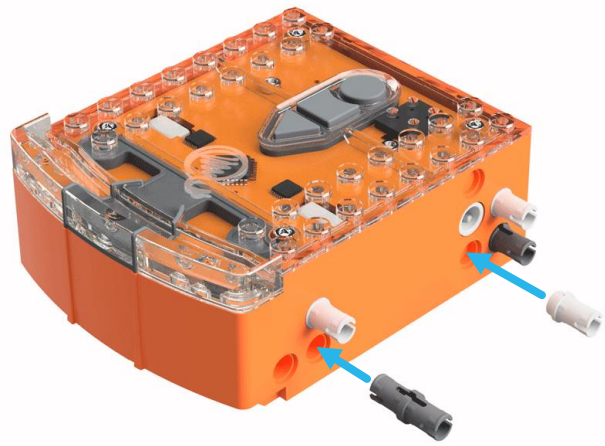

3

1x 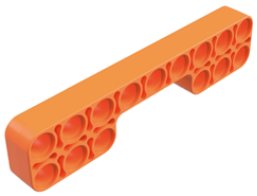

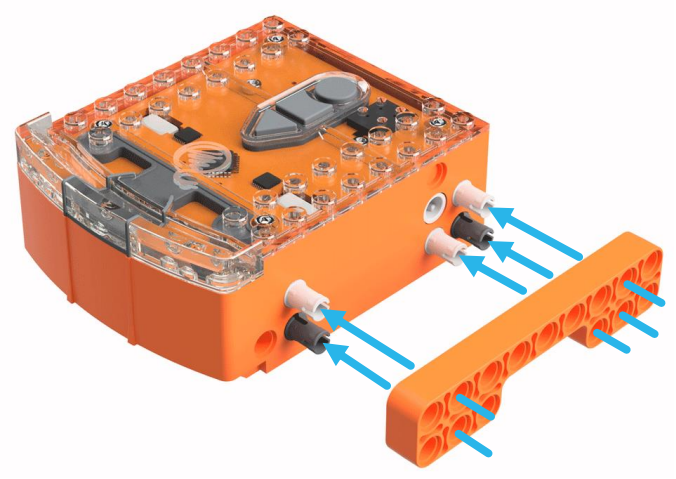

4

4x 1x 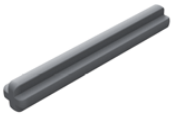 1x 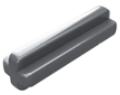

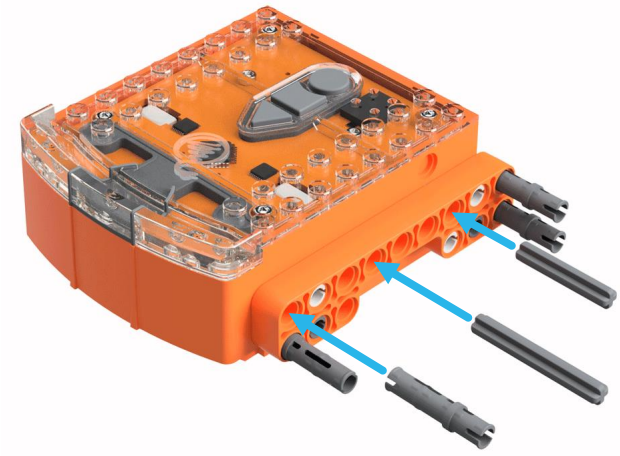

1:1

5

1x 1x

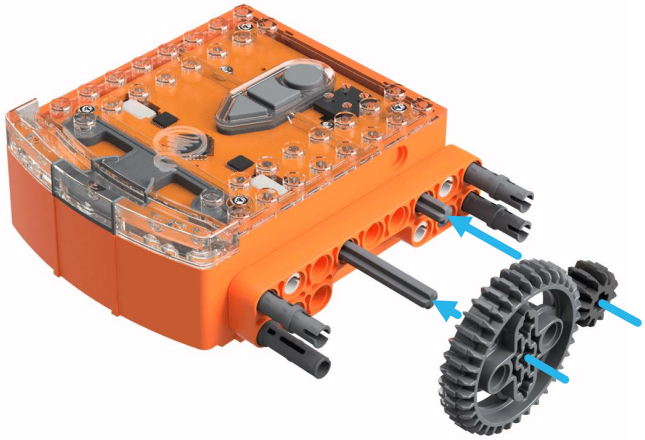

6

1x 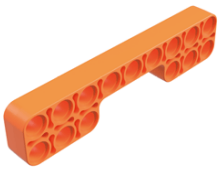

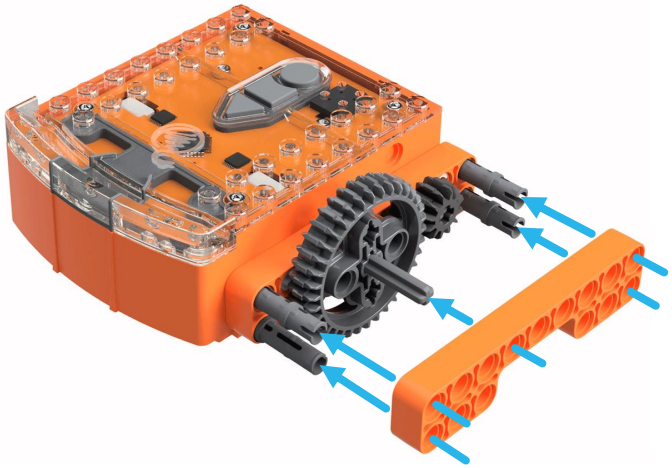

7

1x 1x

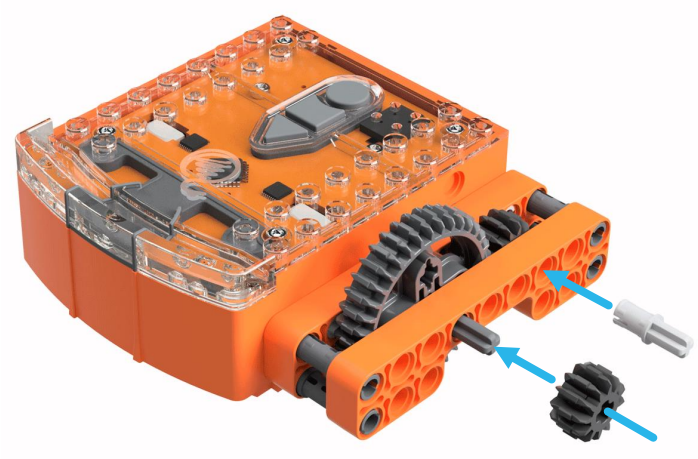

8

2x 4x 1x

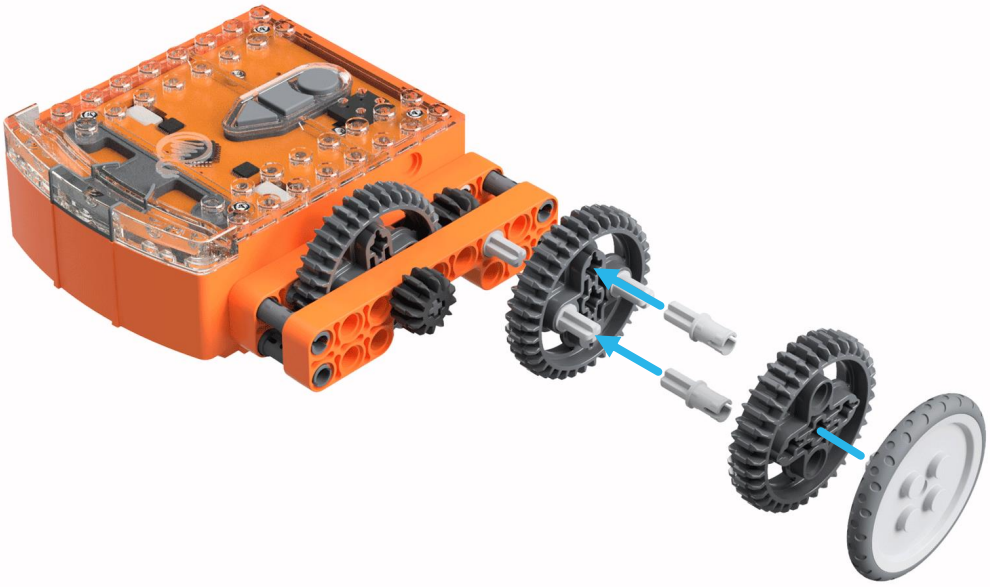

9

1x 1x 1x

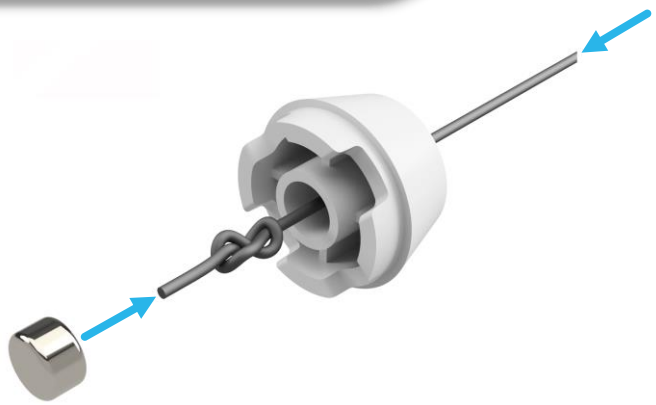

10

1x 1x

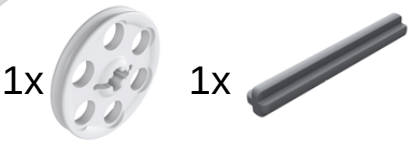

1:1

④

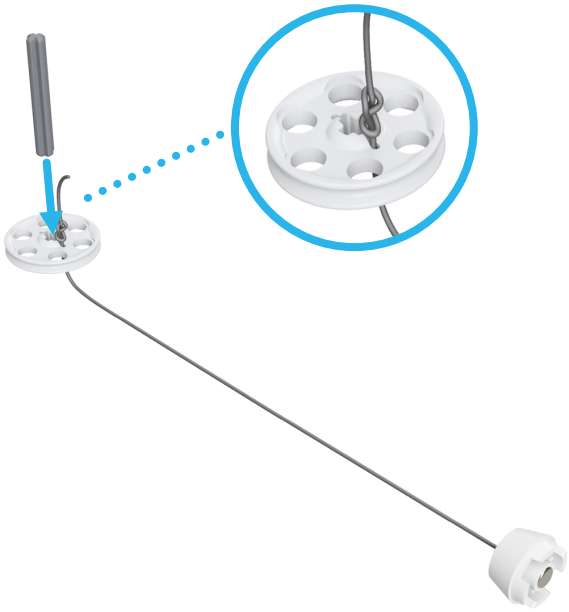

11

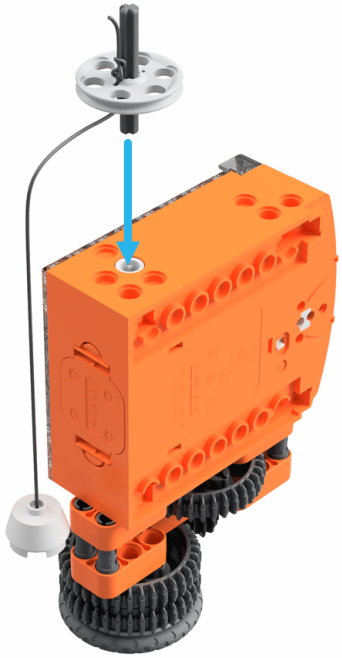

12

2x
2x
3x
4x

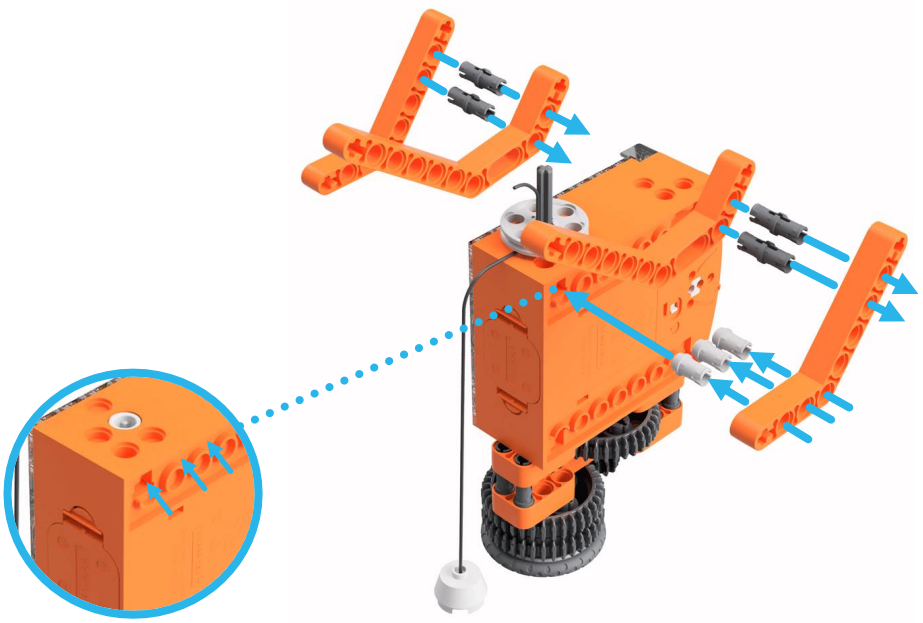

13

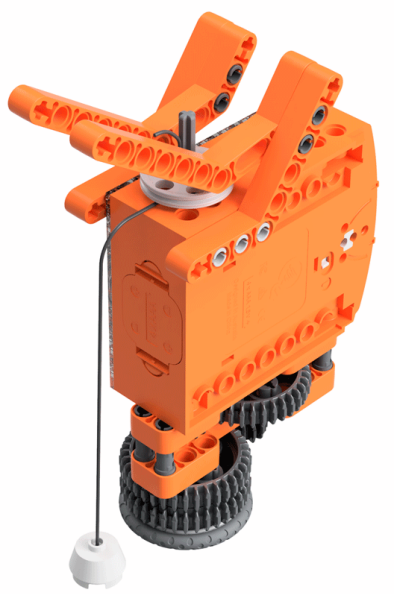

14

2x 4x 2x

1:1

6

15

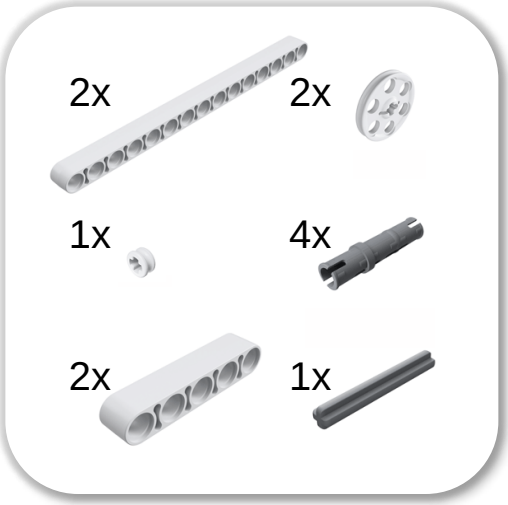

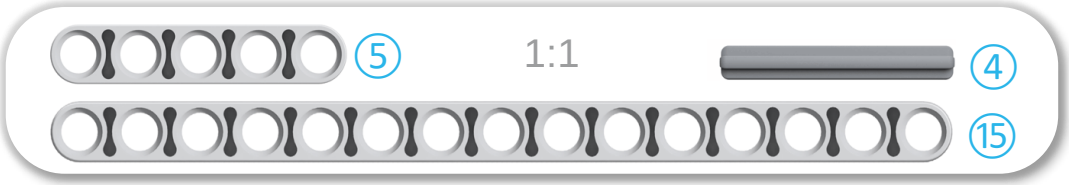

16

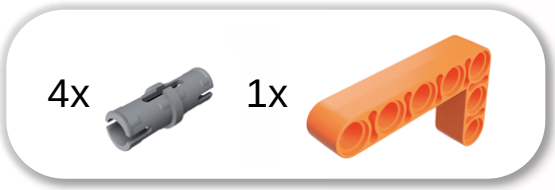

17

3x 1x 1x

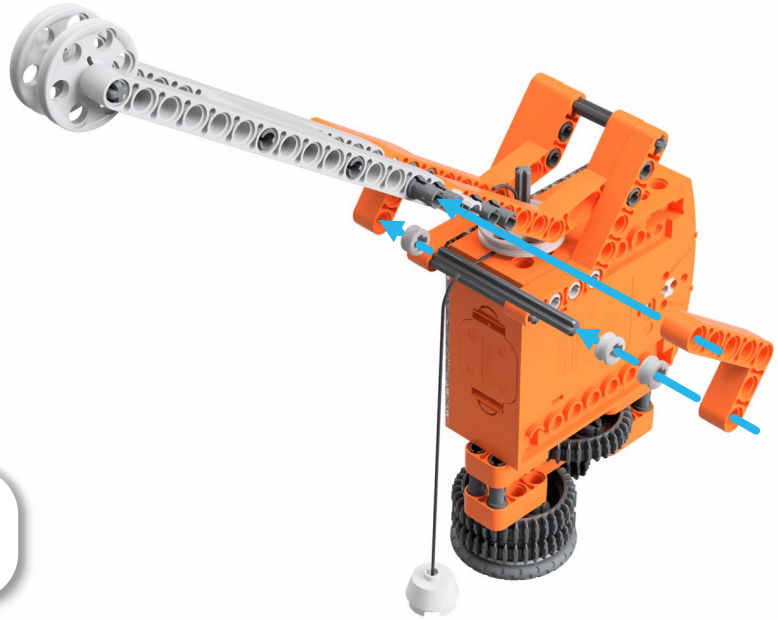

1:1

6

18

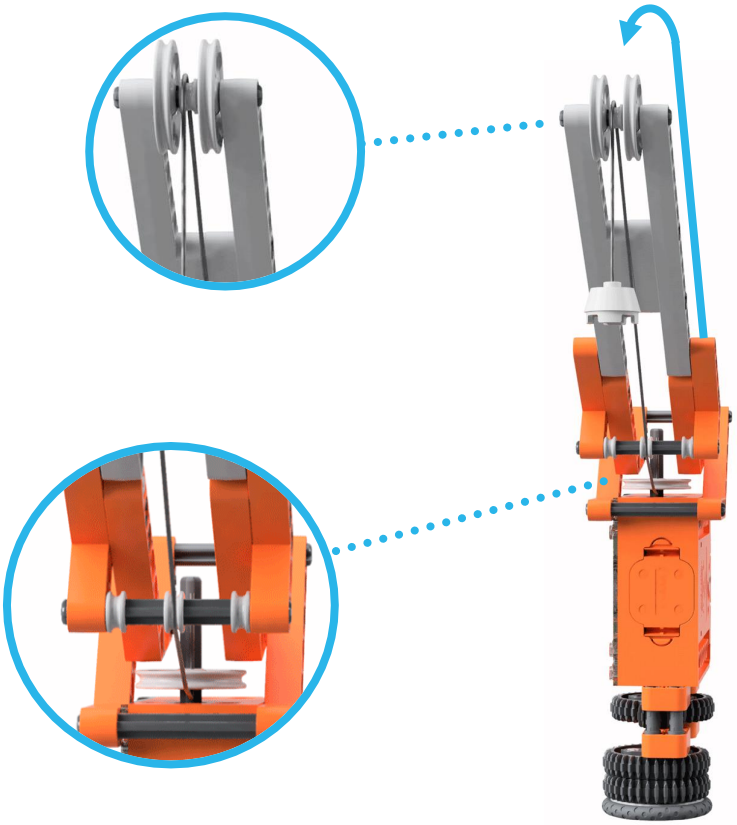

19

20

1x

1x

1:1

3

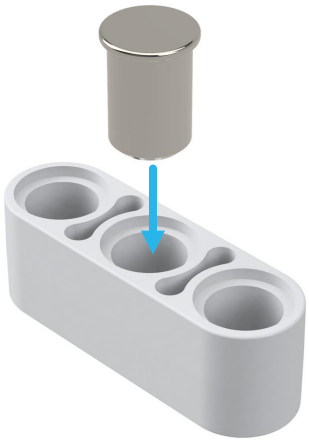

21

Edison
robotics for everyone

EdBuild

Let's build the EdPrinter

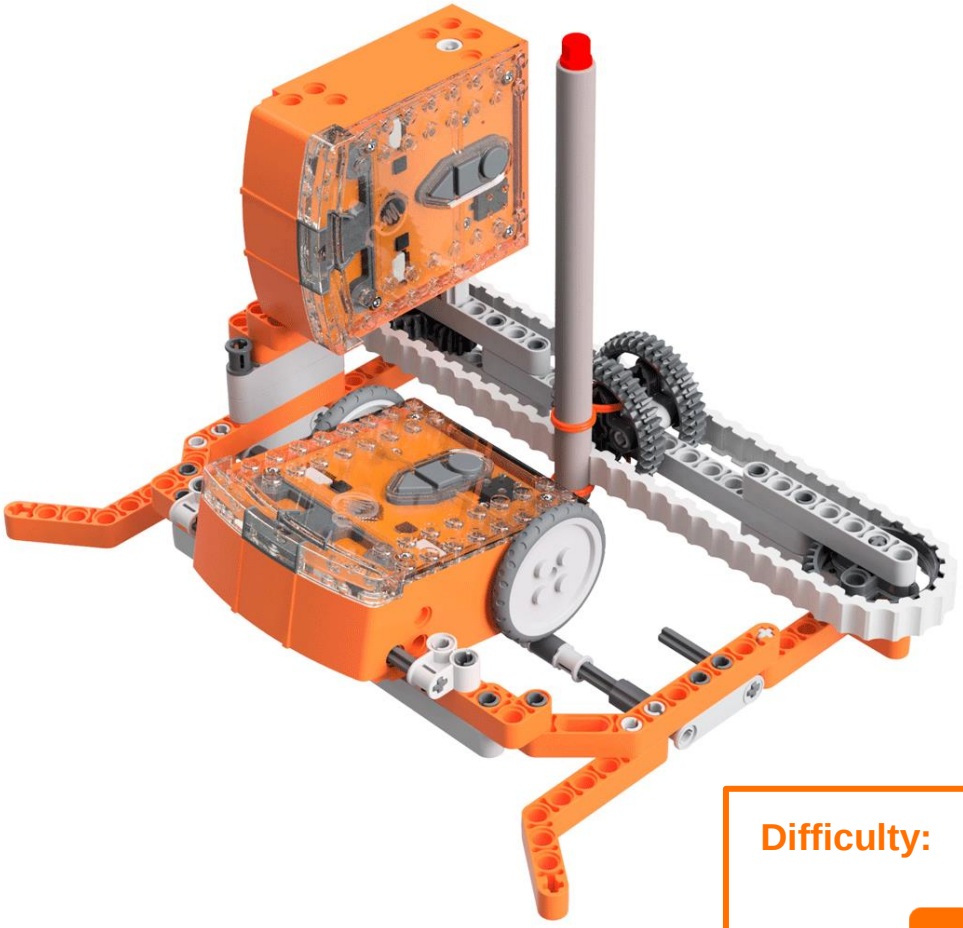

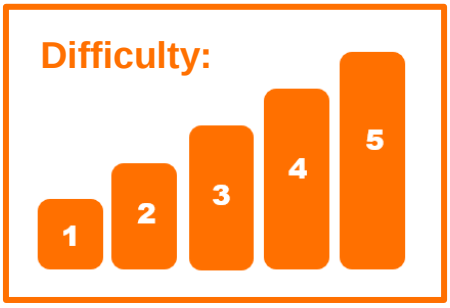

The EdPrinter EdBuild by Microbric Education is licensed under a Creative Commons Attribution-ShareAlike 4.0 International License.

EdBuild – the EdPrinter

The EdPrinter is a pen plotter which can be programmed to draw a range of different shapes using EdPy. This guide includes the share links to the official base programs for the EdPrinter, with which you will be able to draw a rectangle. You will then be able to use the base programs to draw other shapes with the EdPrinter.

Build difficulty rating

The EdPrinter is rated a level 5 build.

Difficulty rating	Recommended age	Programming skills needed
1	8+	- Barcodes and remote control
2	8+	- Barcodes and remote control
3	8+	- Barcodes and remote control
4	10+	- Barcodes and remote control ***AND*** - EdScratch ***OR*** - EdPy
5	12+	- EdPy

To successfully complete and operate a build, you will need an understanding of the programming skills listed.

Learn more about programming with Edison at:

- **Barcodes:** Appropriate for ages 4+. No prior experience with programming or robotics is assumed or required. www.meetedison.com/robot-activities/youre-a-controller/
- **EdScratch:** Best suited to students aged 10 and up, ideal for students 10 to 13. A basic understanding of programming fundamentals may be helpful. www.meetedison.com/robot-programming-software/edscratch/
- **EdPy:** Best suited to students aged 13 to 16 years old. A basic understanding of programming fundamentals may be helpful. www.meetedison.com/robot-programming-software/edpy/

Get set up

Before you begin this build, check that you have everything you need and that you can do the programming required. It's also a good idea to get familiar with how to build with your Edison robot.

What you need

To make the EdPrinter, you will need:

- 2 Edison robots
- 1 EdCreate – Edison robot creator's kit
- 1 felt-tip pen, marker or coloured pencil
- Paper (see dimensions below)

The EdPrinter works best with a writing utensil that writes with low pressure, such as a felt-tip pen or marker. You can also use a coloured pencil, so long as the pencil's lead is fairly soft.

Paper is loaded into the interior frame base of the EdPrinter, which is approximately 15cm wide. Standard A5 paper (14.8cm x 21cm) works well in the EdPrinter. Standard USA letter sized paper (8.5 inches x 11 inches) or A4 paper (21cm x 29.7cm) halved width-wise will also work. Standard-weight (80-150 GSM) copy paper works best with the EdPrinter.

Programming required in this build

To program the EdPrinter, you will need to program the Edison robots using the EdPy robotic programming language. Links to the programs you need are provided in this guide.

Building with Edison

You can build with Edison using an EdCreate creator's kit or any other LEGO brick compatible building system.

Bricks can be attached to the top and bottom of your Edison robot. Pegs can be attached on the sides of Edison. When Edison's wheels are removed, cross axles can be used in the powered sockets.

There are three types of holes on the side of Edison: pin holes, stud holes, and cross axle sockets. Look at the following images to learn more about how to connect and build with Edison.

Edison's side and top connections

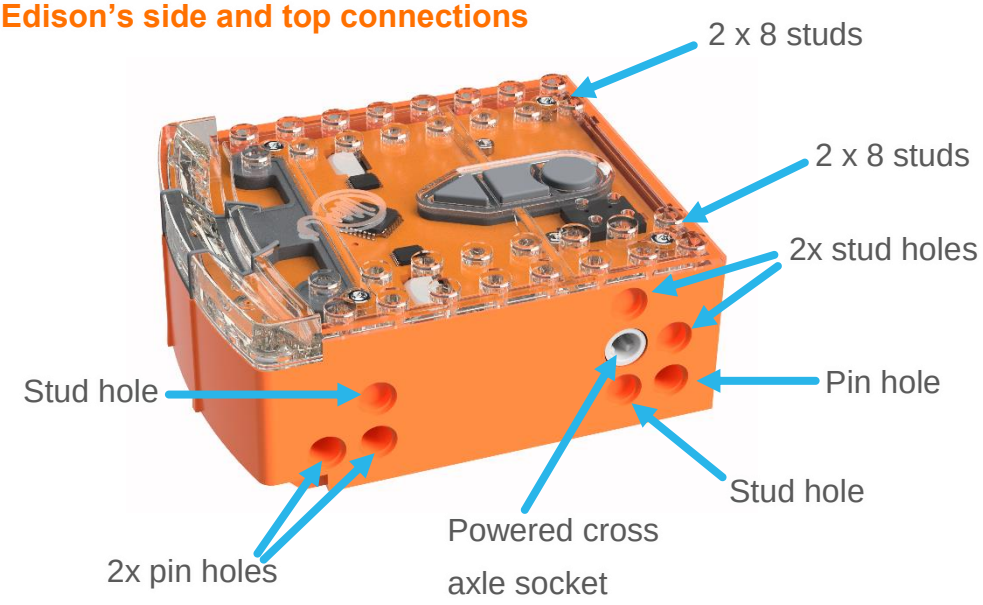

Hole type	Description	Connects to
Pin hole	A full-depth hole for connecting pegs.	
Stud hole	A hole of normal stud-depth which works with half pegs.	
Cross axle socket	A powered socket which rotates.	

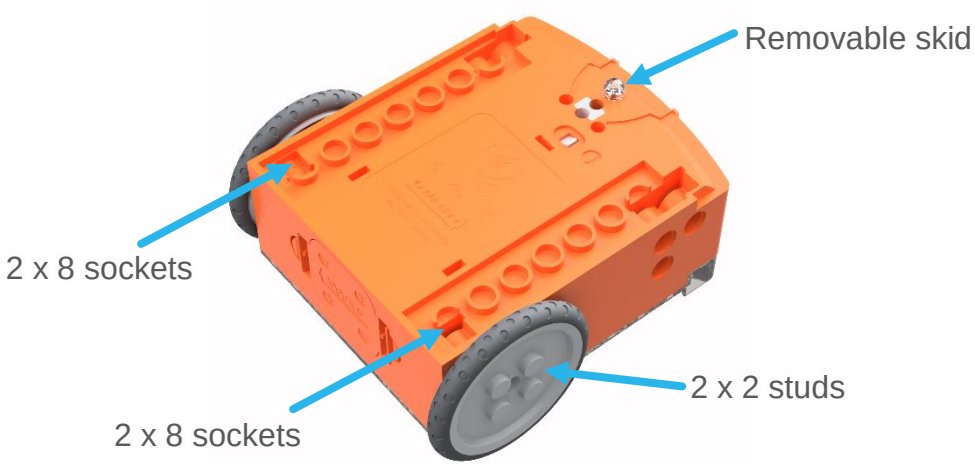

Edison's bottom and wheel connections

Let's build the EdPrinter!

The EdPrinter is a pen plotter which is run using two Edison robots programmed using EdPy. By attaching a writing utensil, such as a felt-tip pen, to the EdPrinter and using a set of basic functions in EdPy, you will be able to program the EdPrinter to draw a range of different shapes.

This is what the finished EdPrinter, with attached pen, looks like:

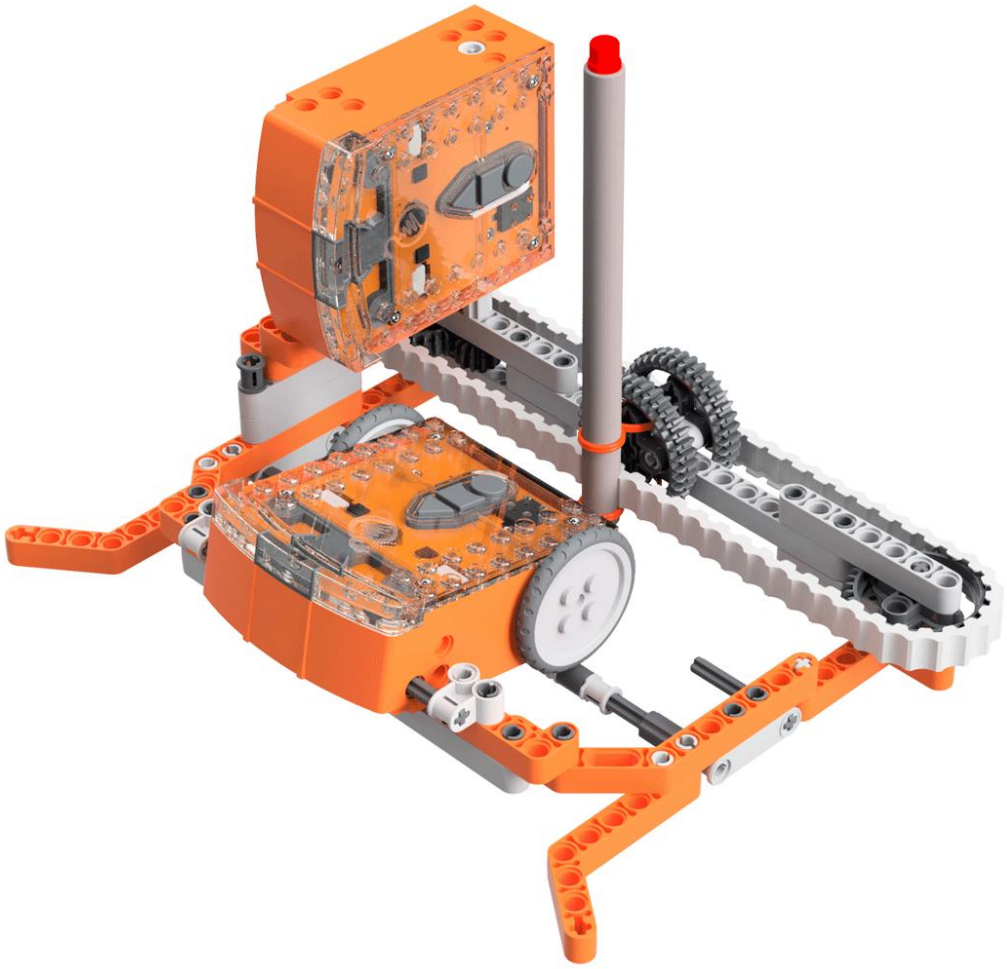

Step 1: Understand how the EdPrinter programs work

Both of the Edison robots used in the EdPrinter will need to be programmed using EdPy. You can download the programs into the robots before or after you build the EdPrinter.

To be able to use the EdPrinter, it is important to understand how the two Edison robots in the EdPrinter work.

Look at the image above. The Edison on its side attached to the belt in the pen-control Edison. The other Edison, with its wheels attached, is the paper-control Edison.

Programming Edison – downloading the base programs

You can download both the paper-controlling robot base program and the pen-controlling robot base program using EdPy, available at www.edpyapp.com

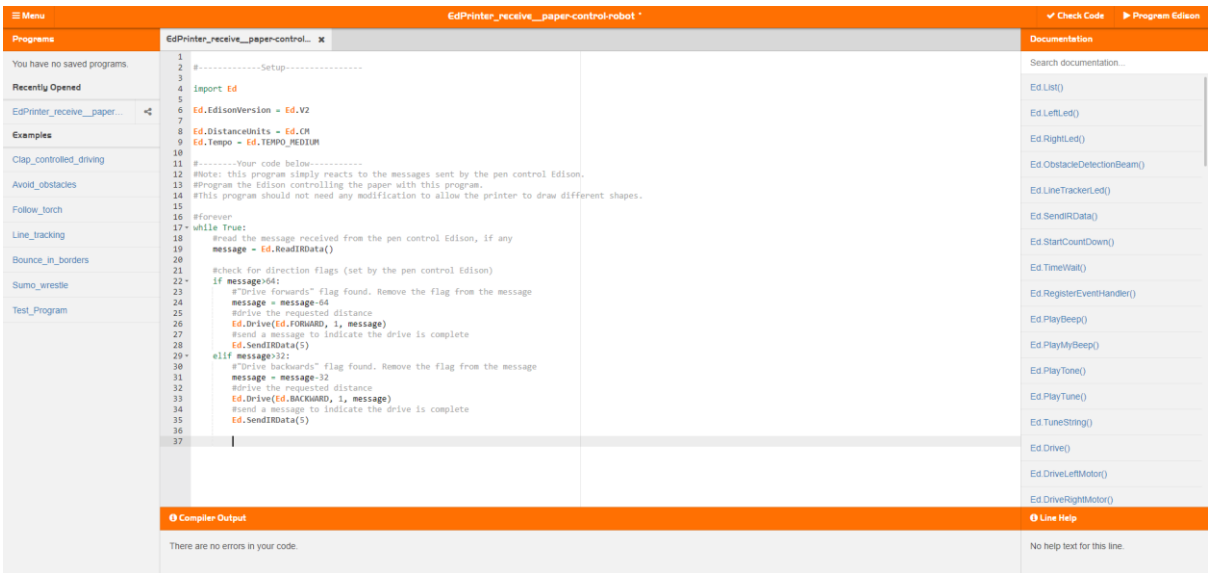

Paper-controlling robot

The paper-controlling robot is the robot which sits with its wheels on the paper. This robot is reactionary – it receives and follows the instructions from the pen-controlling robot.

Use the share code www.edpyapp.com/share/oLn1L to open the official EdPrinter paper-controlling robot program in EdPy. You can download this program as-is into this Edison robot.

You can use this program as-is for any EdPrinter programs. To make your own EdPrinter programs, change the pen-controlling robot program as described below.

Pen-controlling robot

The pen-controlling robot is the robot which moves the belt with the pen attached. This robot is the main driver of the EdPrinter.

Use the share code www.edpyapp.com/share/GzSRl to open the official EdPrinter pen-controlling program in EdPy. You can download this program as-is into your Edison robot. When you run the program in conjunction with the paper-control Edison robot program above you will draw a rectangle with the EdPrinter.

The pen-control base program contains a set of basic functions for controlling the EdPrinter in order to draw lines in four directions: to the right, to the left, to the front and to the back. By rearranging the order in which these functions are called and adjusting the value of the input variable, you can create your own EdPrinter programs.

Step 2: Assemble the EdPrinter

Follow the illustrations step by step to build the EdPrinter.

Reading the instructions:

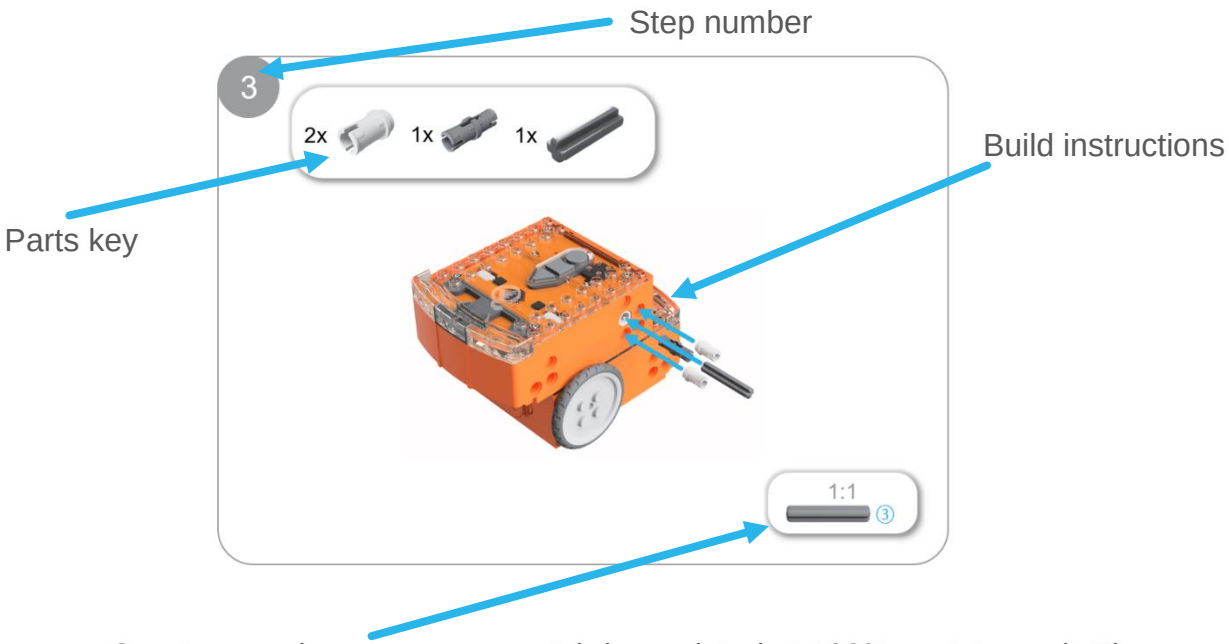

One-to-one piece measurement (when printed at 100% on A4 page). The number in the circle indicates the part's length in number of studs.

Inserting paper into the EdPrinter

Once the printer is fully assembled, you will need to insert paper into the base of the printer. Insert the paper into the bottom of the EdPrinter frame, as follows:

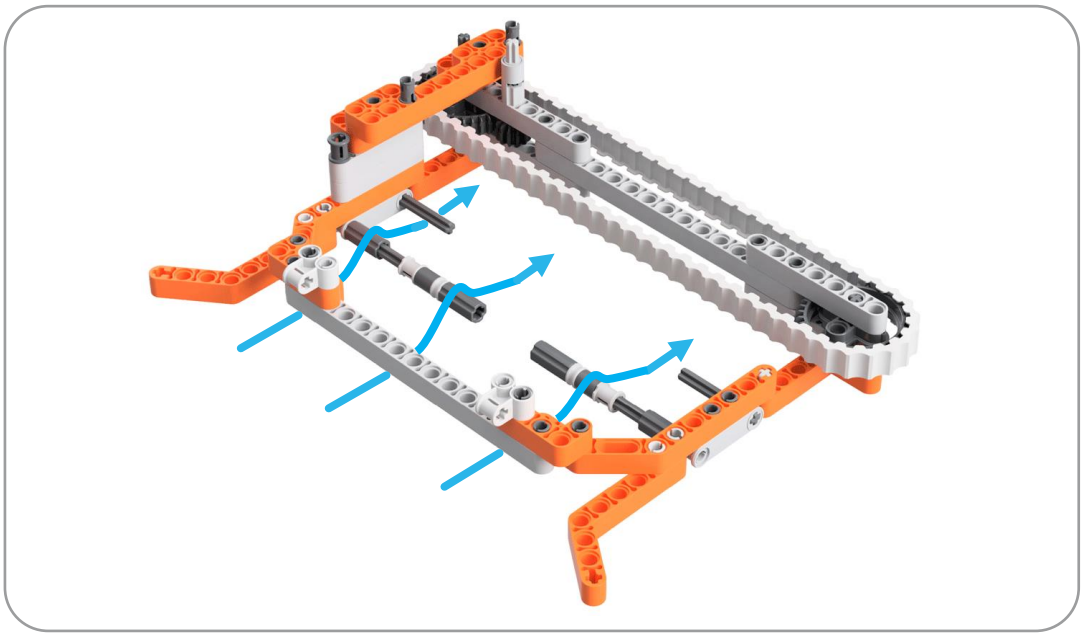

The paper should first go under the front grey beam. It then needs to go over the longer set of bars with the rollers attached. The paper should sit between these rollers and the paper-controlling Edison's wheels. Finally, the paper should be slid under the short set of axles protruding from the frame of the EdPrinter. These axles keep the paper in place.

Be sure to push the paper back so that the pen sits on the paper. The EdPrinter works best if at least 3cm of paper extends back beyond the pen.

Operating the EdPrinter

To operate the EdPrinter, be sure that:

- The EdPrinter is fully assembled
- The pen is at the correct starting point on the belt for your program (e.g. fully to the left end, closest to the pen-controlling Edison)
- Both Edison robots are turned on and each has the correct program downloaded
- Paper is correctly loaded into the EdPrinter base.

Press the play (triangle) button on the paper-control Edison robot first. Then press the play (triangle) button on the pen-control Edison robot second. This will run the program and draw your shape.

1

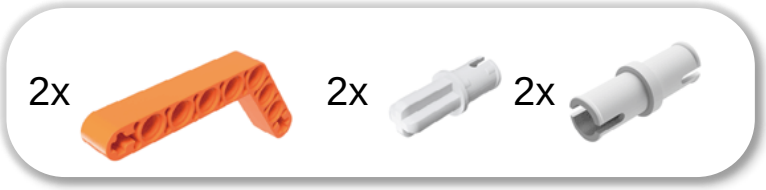

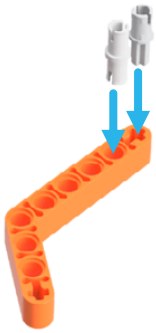

2

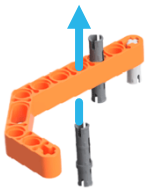

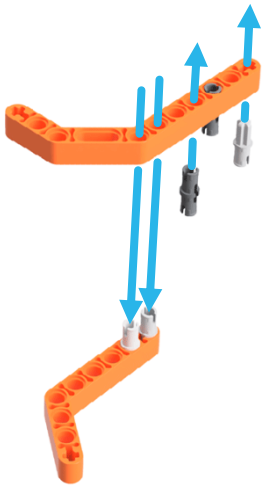

3

2x 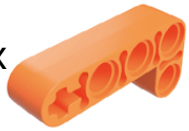 4x 2x 2x

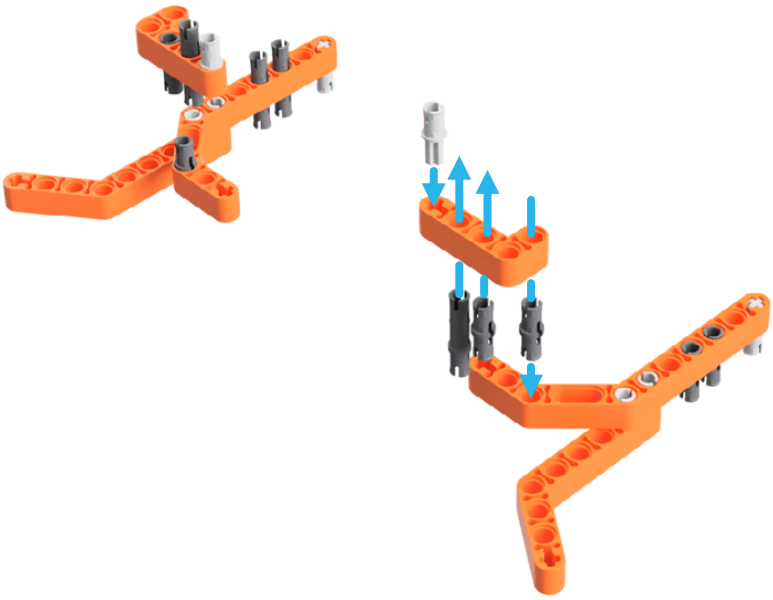

4

2x 1x 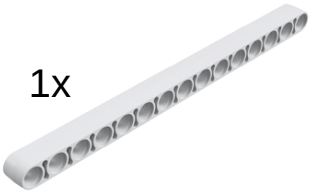

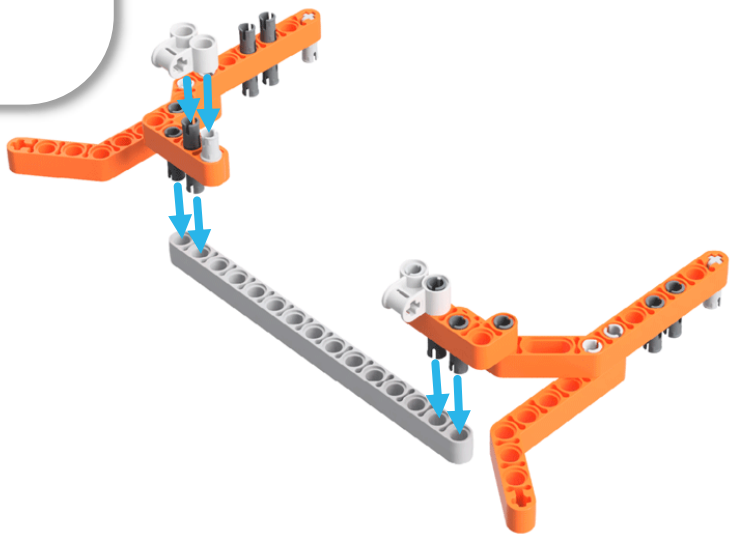

1:1

⑮

5

1x 4x 1x 2x 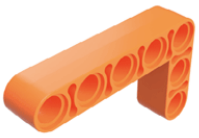

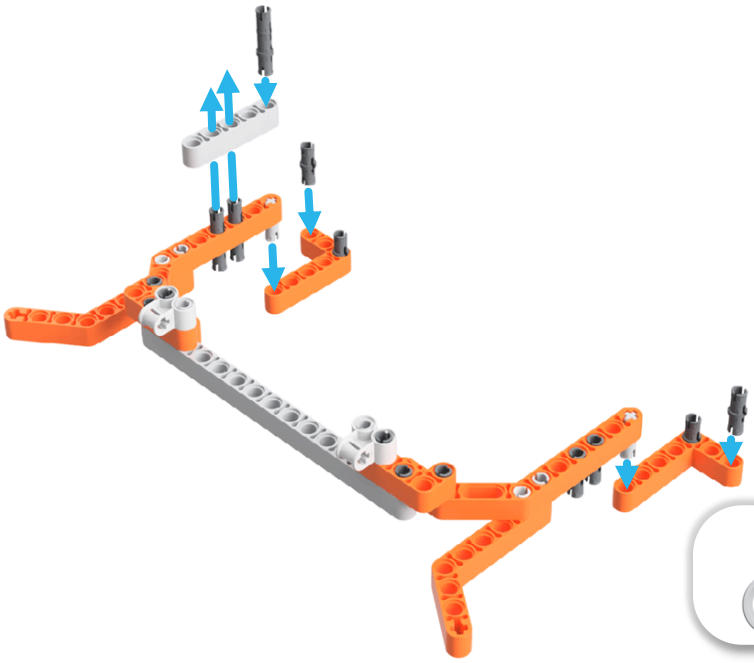

1:1

6

2x 4x 2x 2x 2x 2x 2x

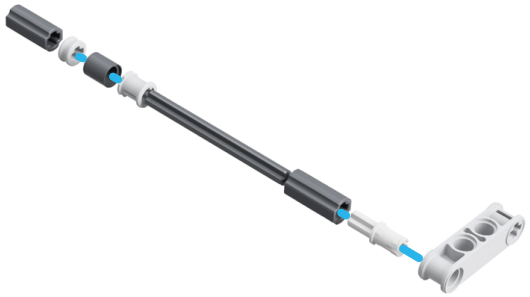

1:1

7

2x 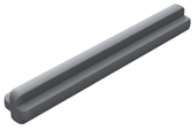

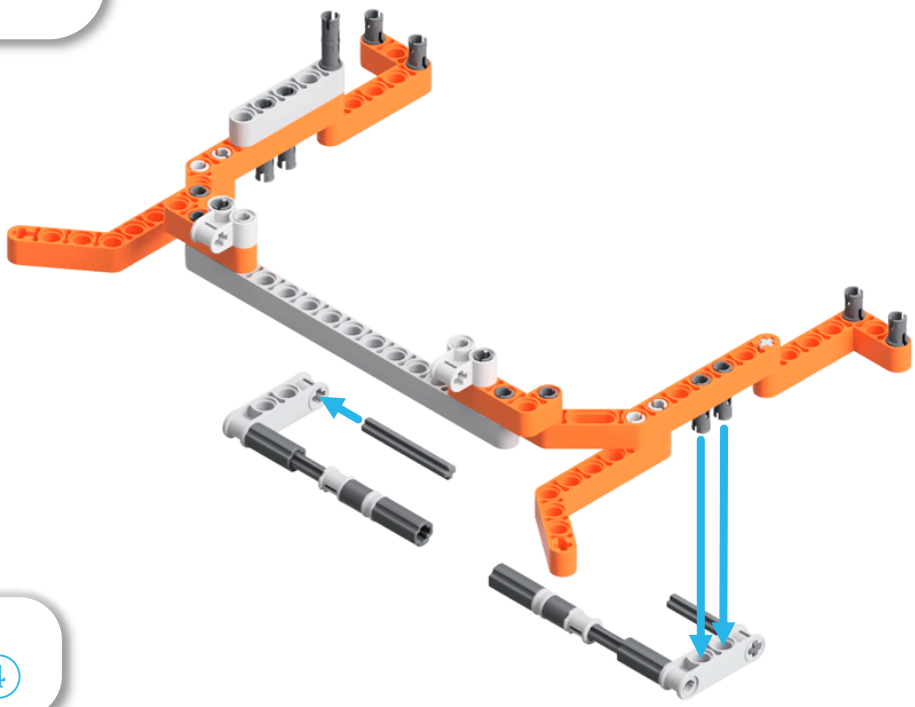

1:1

4

8

1x

1x 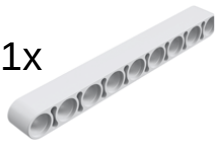

1x 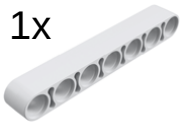

4x

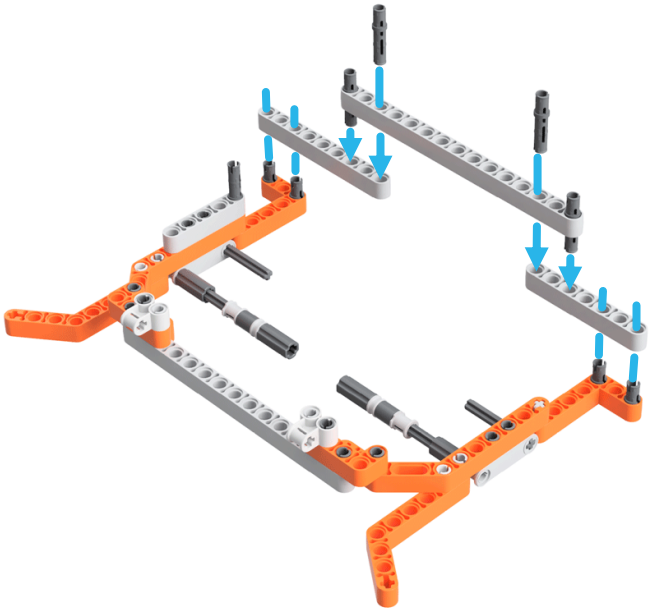

1:1

7 9

15

9

1x 1x 2x

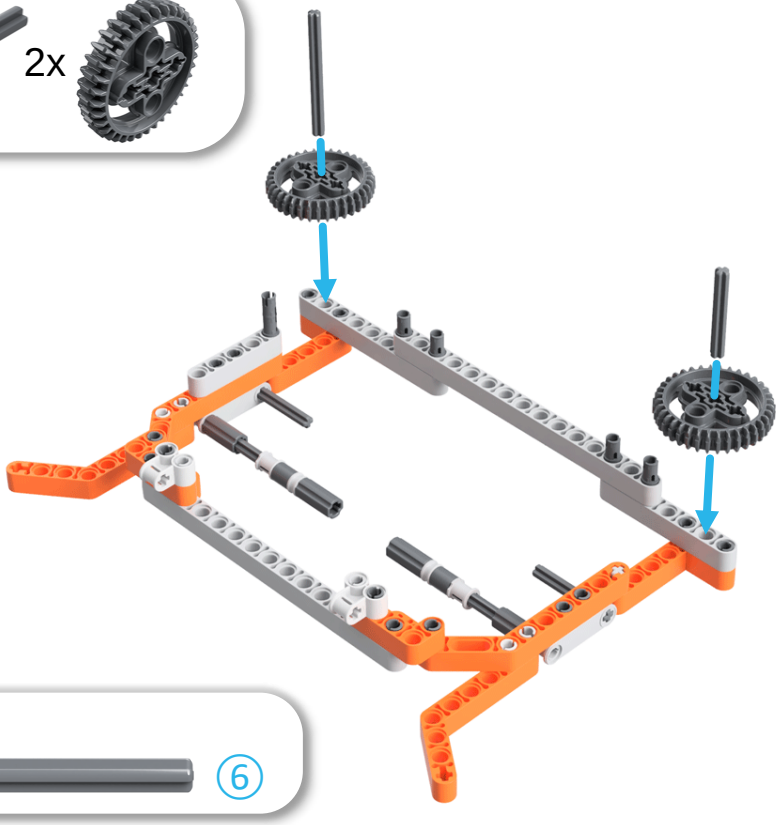

1:1

3 6

10

1x 1x 1x

1x 1x

1x 1x

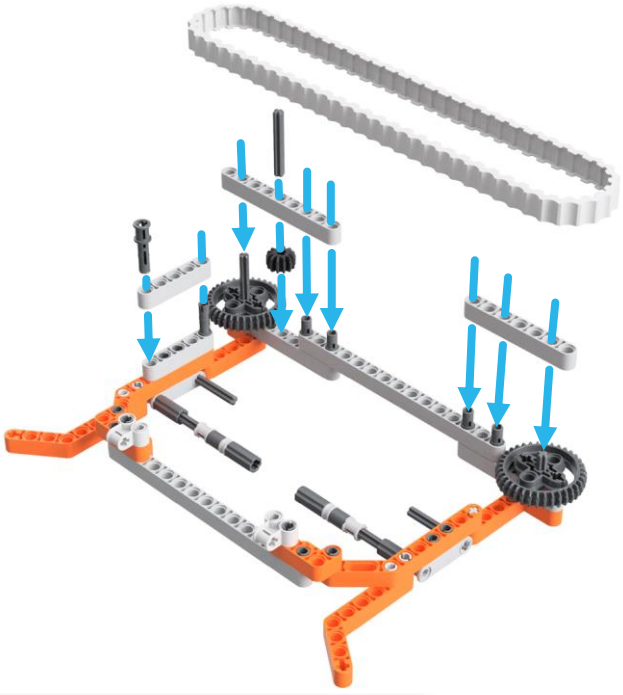

7 1:1 4

9 5

11

1x 1x 1x 1x

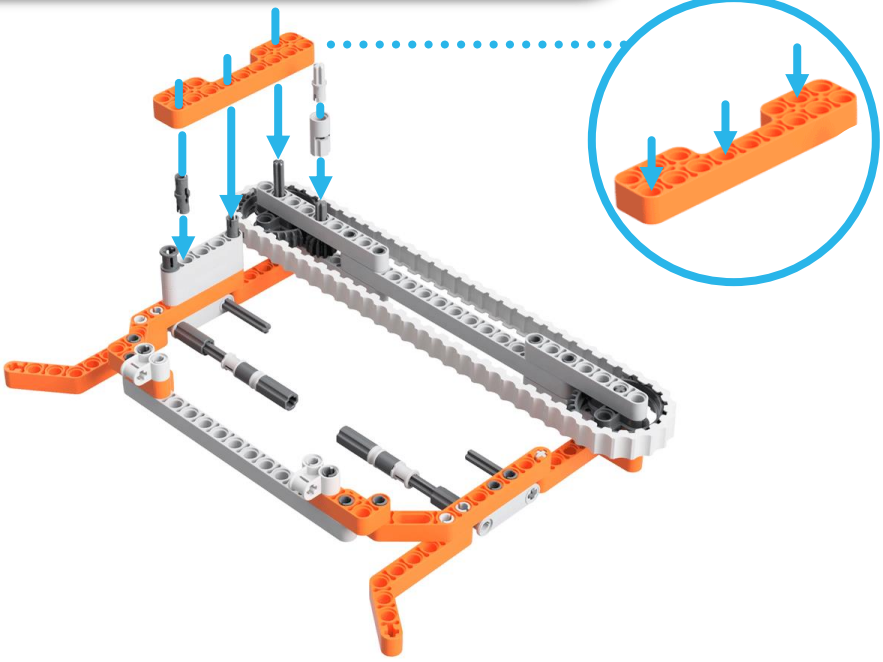

12

1x 3x 1x

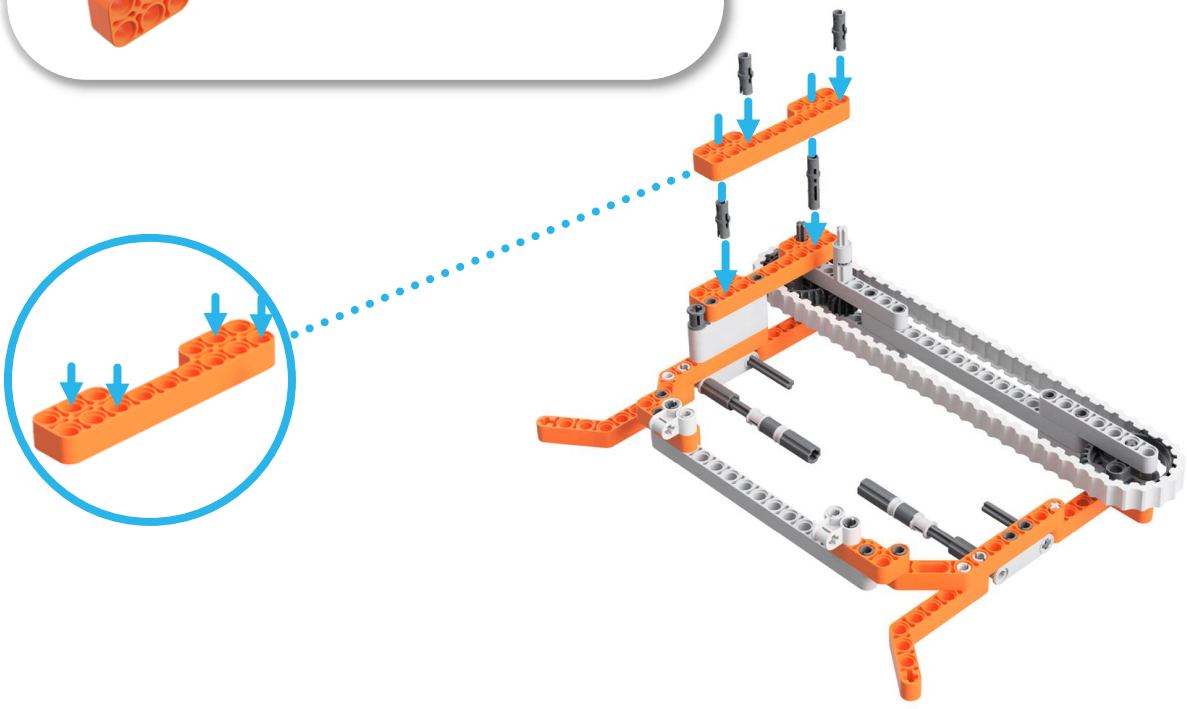

13

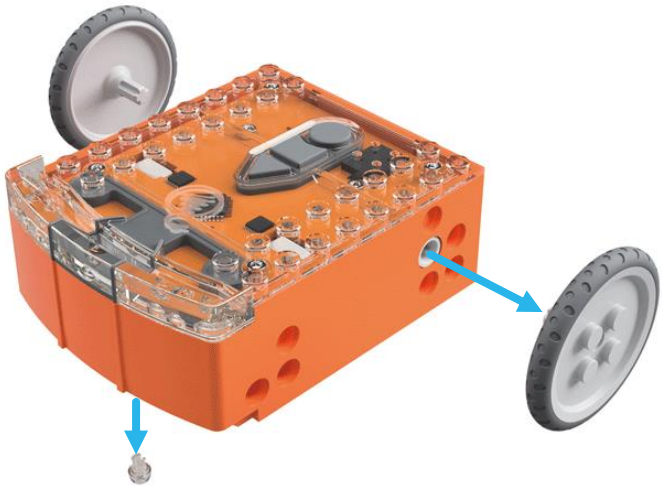

14

15

2x

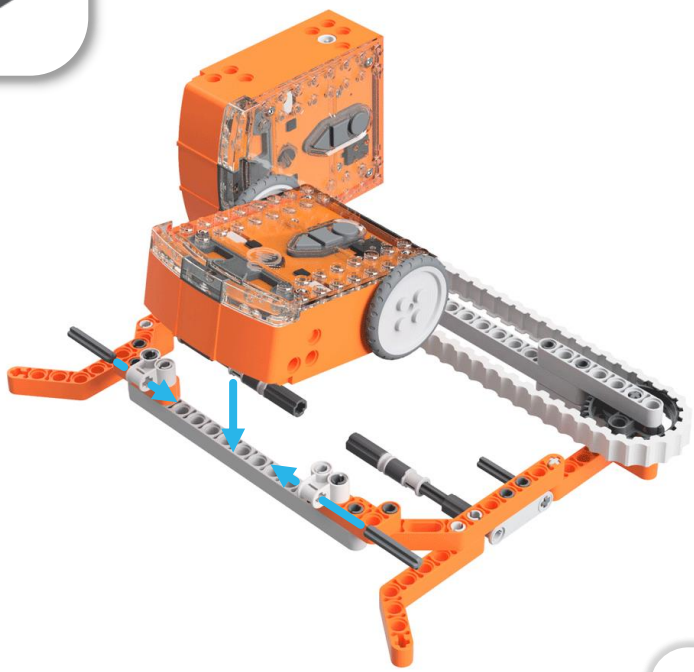

1:1

③

16

1x

1x

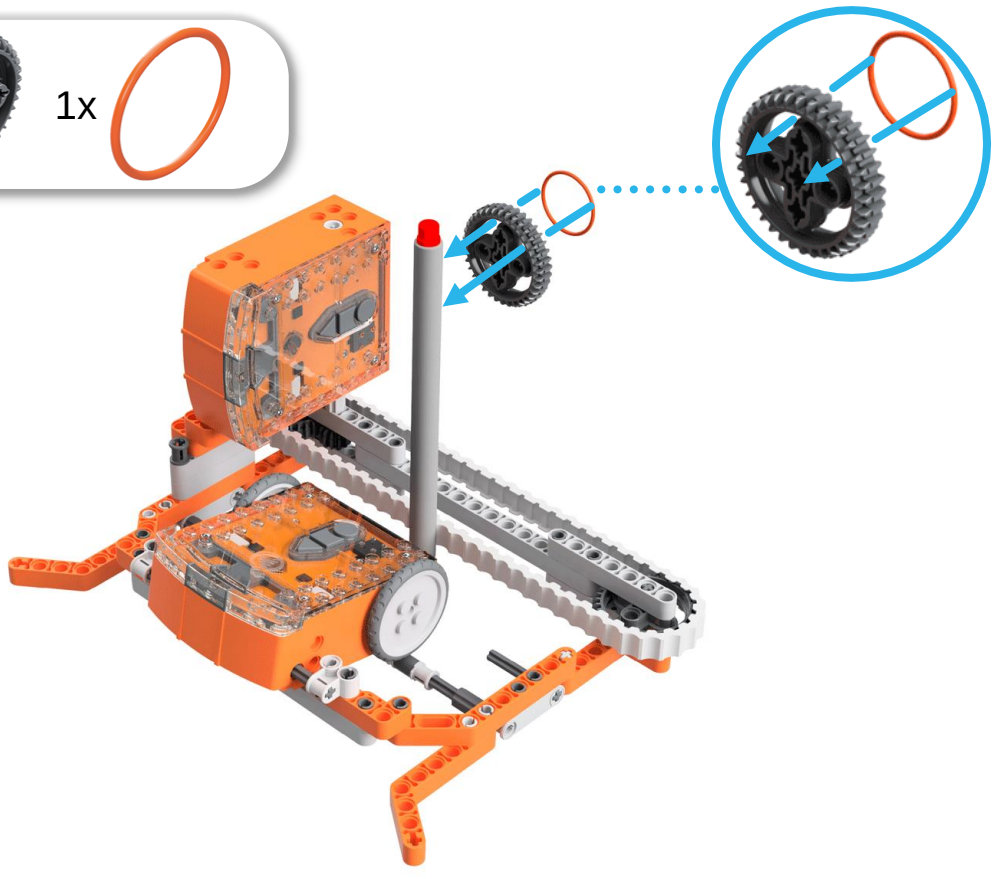

17

1x

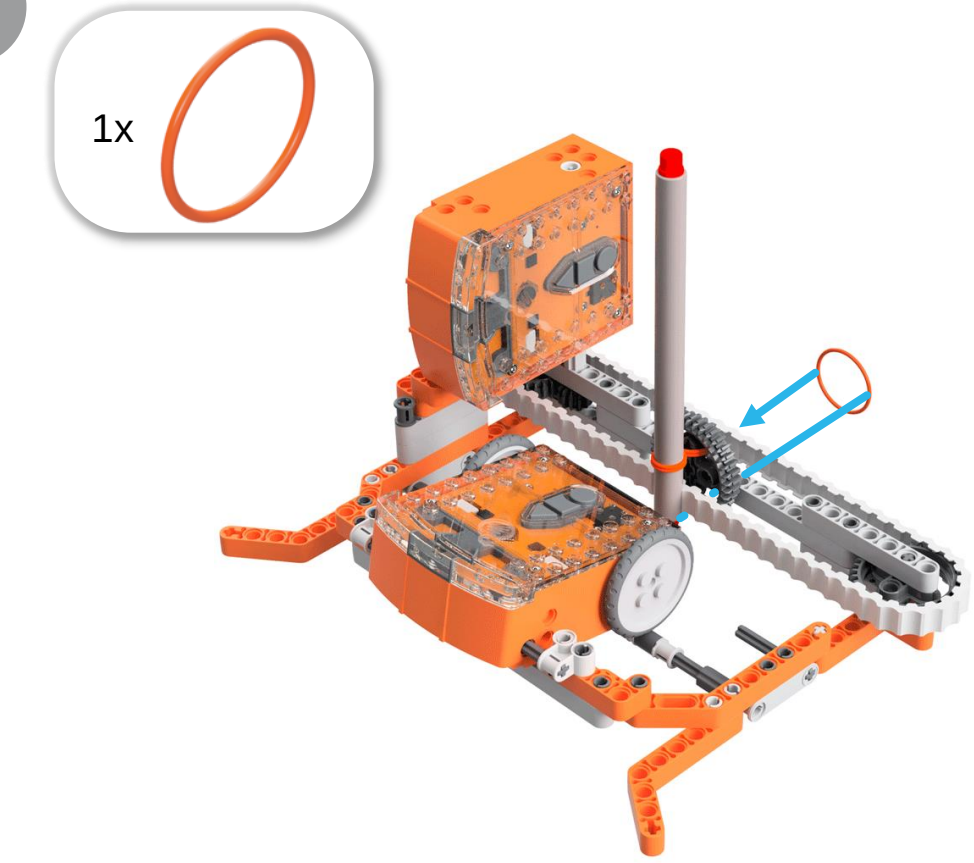

18

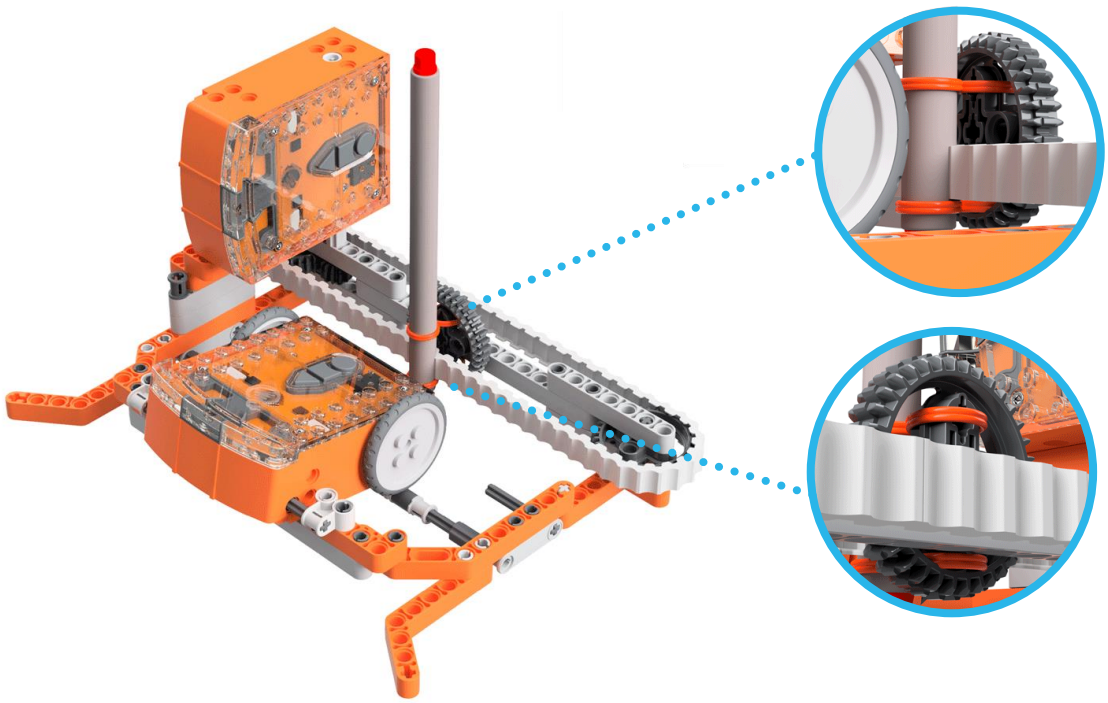

19

1x 4x

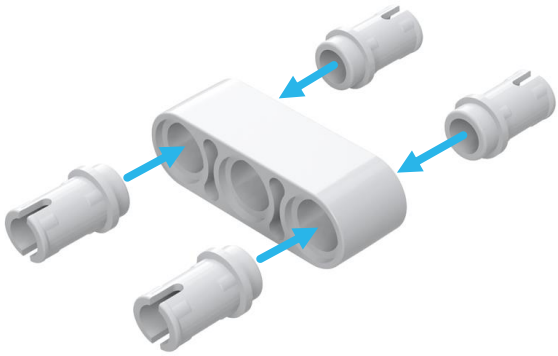

1:1 3

20

1x

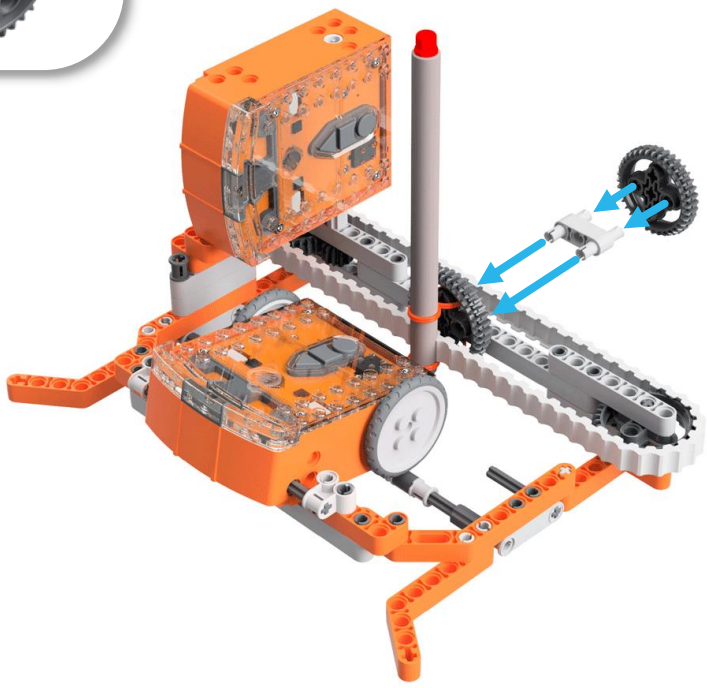
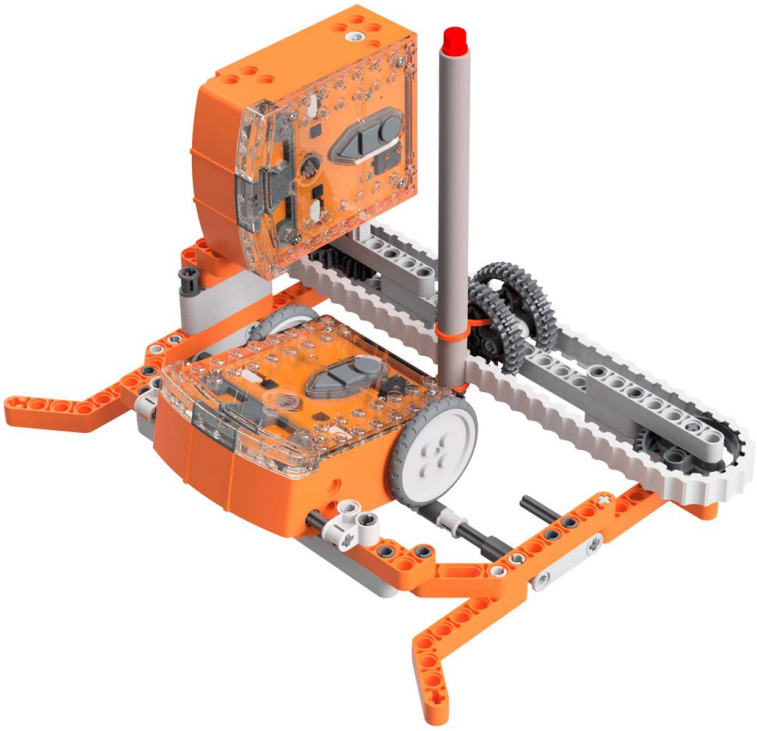
21